Process Instrumentation

TDR HUNTER

TDR Level Meter

- ***Guided Radar Level Measurement for liquids, interface and solids***
- ***Accuracy (liquids) is +/- 0.12" (3mm)***
- ***Optional Explosion Proof and Intrinsically Safe versions***
- ***Measures level up to 115 ft (35 m)***
- ***Stainless Steel 316L or Hastelloy C single/double rod or cable element***
- ***Extreme: +390°F & 4,350 psig ratings***
- ***2-wire Loop Powered***

TDR Hunter
TDR Radar Level Measurement

The ECHO TDR Hunter is an advanced radar level transmitter that utilizes the latest state-of-the-art technology to provide reliable measurement and control. High in functionality, the TDR Hunter offers accurate and reliable measurement of liquids, slurries and solids. The instrument comes pre-programmed to the customer's level application, so installation and calibration takes minutes to accomplish. It will display level, distance, volume, liquid/liquid interface and a linear graphical display.

The four buttons allow for easy programming using a quick setup method. No manual needed. ECHO Process Instrumentation has eliminated the need for parameter programming by using a simple question and answer sequence which allows the TDR Hunter to be programmed in minutes. It is the ideal instrument for level measurement because it is unaffected by obstructions since the radar signal travels up and down the rod/cable element.

Big in functionality and small on price, the TDR Hunter is perfect for the toughest applications, including LPG and LNG tanks. It can withstand high temperatures and pressures. We offer a standard 60 day Performance Guarantee and 1 year warranty. We will prove our technology and high quality product is the best in the market and completely risk free to the customer. A totally flexible solution!

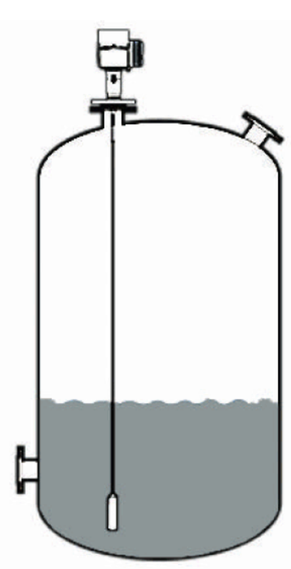

Liquid Tank Level

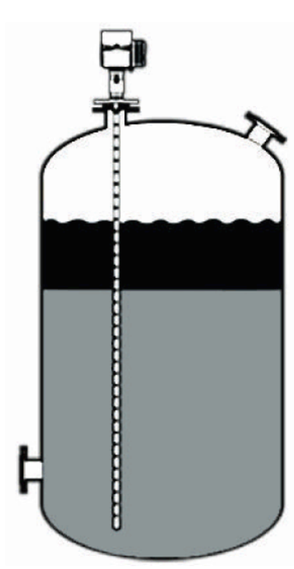

Liquid - Liquid Interface Level

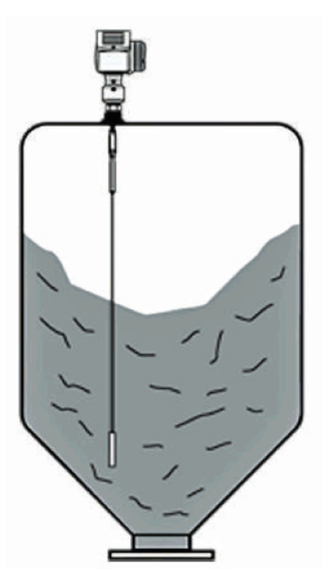

Solids Silo Level Measurement

Liquid Tank Level in Bypass

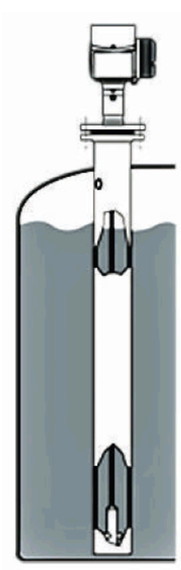

Liquid Tank Level in a Still Well

P.O. Box 800 • Shalimar, FL 32579 USA • Ph: 850.609.1300 • Fax: 850.651.4777 • Email: info@echopi.com • www.echopi.com

Technical Specifications:
TDR HUNTER

Process Instrumentation

General

Measuring principle	TDR (Time Domain Reflectometry)
Function	Level Measurement for liquids, solids, and liquid-liquid interface
Element	Single or Double: Rod, Coaxial, Cable
Element Material	Stainless Steel 316L, option Hastelloy C
Requirement	≥ 1.1 (≥1.6 for rods) Dielectric constant
Minimum Range	0.4 in (10 mm)
Maximum Range	Rod: 13 ft (4m), Cable: 115 ft (35 m)
Accuracy (Liquid)	Range <33ft, ±0.12 in (3mm) >33ft, ±0.12in (3mm) ±0.03% PV
Accuracy (Solids)	+/- 0.8 in (20 mm)
Accuracy (Interface)	+/- 0.4 in (10 mm), 2 inch minimum
Resolution	0.04 in (1 mm)

Transmitter

Housing	Aluminum
Wetted materials	Stainless Steel 316L, Optional Hast. C
Protection rating	NEMA 4X (IP 66), Optional NEMA 6X
Ambient Temp.	-40 ...175 °F (-40 ... 80 °C)
Process Temp.	-40 ...390 °F (-40 ... 200 °C)
Gasket Temp.	-4 ... 392°F (-20° ... 200°)
Operating Pressure	-14.5 ... 4350 psig (-1 ... 300 bar) (subject to connection used)
Display	9 lines with 4 button keypad
Power supply	24 VDC Loop Powered (2-wire)
Mounting (Thread)	1/2, 3/4, 1 inch MNPT (option G thread)
Mounting (Flange)	1 ... 8" 150/300 lb (DN25...150)
Cable Entry	1/2" NPT
Weight	Depends on configuration
Languages	English (others on request)

Output

Analog Output	4-20 mA
Maximum Load	350 Ohm
Resolution	+/- 3 µA
Error Signal	Low is 3.6mA, High is 22mA

Approvals

FM, CSA	XP: Class I, Div. 1, Grp A, B, C, D XP: Class II, Div. 1, Grp E, F, G; Class III IS : Class I, Div. 1, Grp A, B, C, D IS : Class II, Div. 1, Grp E, F, G; Class III
ATEX	ATEX II G/D 1, 1/2, 2 EEx ia IIC T6...T3 ATEX II G/D 1/2, 2 EEx d ia IIC T6...T3

Subject to change without notice.

TDR HUNTER DIMENSIONS (inches)

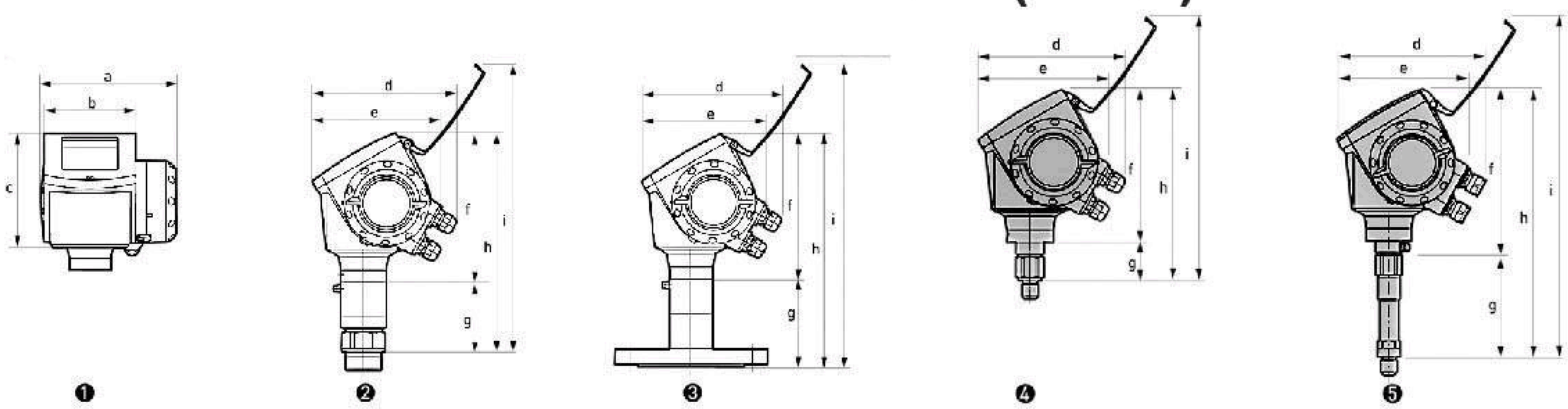

Picture Number	Process Connection MNPT / 150 lb Flange	a	b	c	d	e	f	g	h	Weight lbs (NPT/FLG)
1	Electronics Housing	7.1	4.8	6.2	7.2	6.7	7.5	-	-	7.3
2	NPT (G) Thread, All Other Rods/Cables/Coaxial	7.1	4.8	6.2	7.2	6.7	7.5	3.9	11.4	6.6
3	Flange: 1...3 inch ASME	7.1	4.8	6.2	7.2	6.7	7.5	5.0	12.5	8.8 ... 15.4
3	Flange: 1...8 inch ASME	7.1	4.8	6.2	7.2	6.7	7.5	5.0	12.5	15.4 ... 26.5
4 & 5	NPT (G) Thread, Single Cable 0.08: dia	7.1	4.8	6.2	7.2	6.7	7.5	1.9	9.4	8.8

IMPORTANT: Consult ECHO technical support for choosing the correct single/double rod, cable or coaxial element.

P.O. Box 800 • Shalimar, FL 32579 USA • Ph: 850.609.1300 • Fax: 850.651.4777 • Email: info@echopi.com • www.echopi.com