Level Hunter III

Installation Manual

ECHO Process Instrumentation, Inc.
Mail to: PO Box 800, Shalimar, FL 32579
Ship to: 70 6th Ave, Shalimar, FL 32579
Phone: 850.609.1300 Fax: 850.651.4777
Email: info@echopi.com
Website: www.echopi.com

Contents

About this Manual

This manual provides important information about the installation, wiring, operation, and control of your ECHO product. Please read this manual before installing or operating the product. In addition to operating the product, this manual is very important. Please keep it in a safe place for easy reference.

Please note that the contents of this manual are subject to change without prior notice if the product is modified, upgraded or improved.

Although we have checked all contents of this manual but there is the possibility of some errors. Therefore the contents of this manual are regularly updated. We welcome any/all suggestions for improvement.

I. Safety Guide Instruction

1. Authorized Personnel

The installation and operation of the product must be carried out by licensed experts or qualified personnel. Please always wear protective equipment when operating the products.

2. Operation

Before operating the unit, please read this manual thoroughly. The manufacturer isn't responsible accidents caused by user's misuse or modification of the product without manufacture's permission. Conduct periodic inspection of the product.

3. Cautions

This manual provides all information you need to operate, maintain and trouble shoot the LEVEL HUNTER III. Please follow the instructions. The manufacturer is not responsible in any way for the risk of an accident when user doesn't follow the instructions.

4. Product Inspection

When opening the product package box, look carefully to determine if the products or accessories have been damaged or contaminated. If the product has been damaged, it may not function properly.

5. Symbols

Caution: If it is ignored, faults or malfunctions could be result.

Warning: If it is ignored, injury to people and serious damage to the instrument could be result.

Electric Shock: If it is ignored, the product could be damaged by electric shock

Information: It provides additional information.

II. PRODUCT

LEVEL HUNTER III is an ultrasonic non-contacting level meter which will increase the effectiveness of your liquid management process. It is available (upon order) to connect up to two sensors. Depending on the sensor,

the measurement range is 5 meters, 10 meters or 15 meters. LXD-05 is a 5 meter sensor. LXD-10 is a 10 meter sensor and LXD-15 is a 15 meter sensor for the LEVEL HUNTER III. The sensor cable can be extended up to 360 meters. The LEVEL HUNTER III's friendly user interface offers the user easy installation and calibration. It is also simple and inexpensive to maintain. All functions are optimized which enables you to effectively monitor the liquid level and keep your facilities running safely and reliably.

Application:

LXD-Series transducers are suitable for liquids level monitoring in all industries, particularly in the water and wastewater industry.

CAUTION

Compatible sensors only LXD-05, LXD-10, LXD-15.
The sensors; XDS-08, XDS-12, XDS-15 are not compatible with the LEVEL HUNTER III controller.

Depending on the sensor material, the application can be restricted. Before installing the sensor, please check the chemical compatibility chart.

1. Principle of operation

The transducer transmits ultrasonic pulses to the measurement target. The pulses are reflected from the surface of the target and received back by the sensor. The running time is converted into distance and level or volume on the display.

D=(C·T)/2

D: DISTANCE

C: SOUND VELOCITY

T: TIME OF FLIGHT

Distance: from the sensor bottom to surface of the target.
Level: from the bottom of the vessel to the surface of the target.
Empty: from the sensor bottom to the bottom of the vessel.

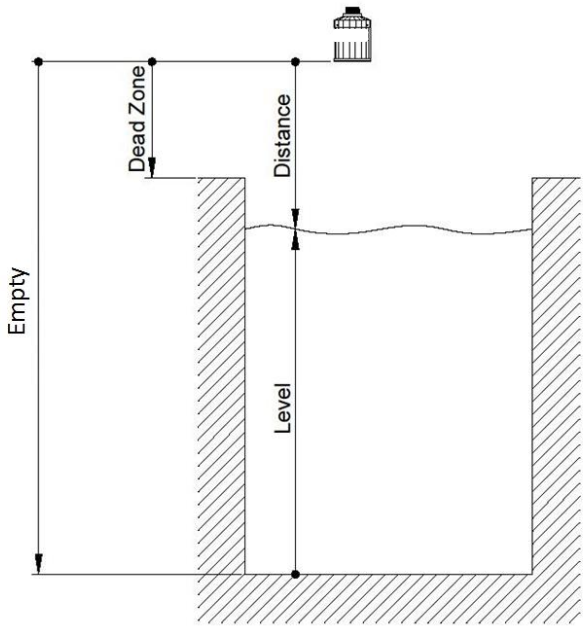

2. Specification

LEVEL HUNTER III (Controller)	
Measurement	Ultrasonic non-contacting
Accuracy	0.2% of F.S
Resolution	1mm
Damping Rate	0.1m/min - 100m/min adjustable
Output Analog	Analog 4~20mA,max 750Ω isolated
	Relay 3 ea or 6 ea
	Digital RS232, RS485, Modbus
Display	Illuminated Graphic LCD
IP Rating	IP65 (NEMA 4X)
Temperature	-20℃~60℃(-4℉~140℉, 80% relative humidity
Material	Polycarbonate
Dimension	166(W)×250(H)x95(D) mm
Weight	4.4 lbs.
Power Supply	• 100~230V AC±15%, 50/60Hz, 29VA(12W)
	Fuse: 250V T1.0A
	• DC 9~30V, Max 8W (Optional)

LXD-05, LXD-10, LXD-15 (Sensor)	
Range	0.3~ 5m (0.98- 16.4ft), LXD-05
	0.3~10m (0.98- 32.8ft), LXD-10
	0.5~15m (1.64- 49.2ft), LXD-15
Bean Angle	10˚at -3dB
Process Connection	1” NPT
Weight	4.4 lbs.
Material	PP, PVDF
Temperature	-30℃~70℃ (-22℉~158℉), 80% relative humidity
Temperature Compensation by a built-in temperature sensor	
IP Rating	IP68 (NEMA 6P)
Cable	2 Conductor w/ Shield (AWG18)
Cable Extension	up to 360m (1,181ft)

External Temperature Sensor	
Type	NTC, 10 kΩ
Temperature	-30℃~70℃ (-22°F~158°F)
Process Connection	1/8” PT
IP Rating	IP68
Cable	**RG174**

* The Specification is subject to change without prior notice.

3. Product Package

LEVEL HUNTER III is a controller measuring the level with these sensors LXD-05, LXD-10 or LXD-15. LEVEL HUNTER III and sensors are packed respectively.

3.1 Controller Box Package

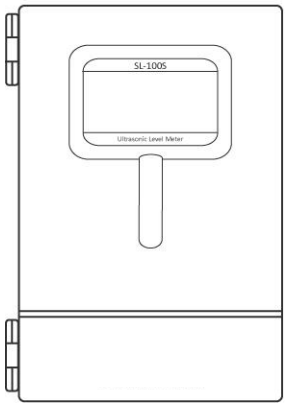

Controller

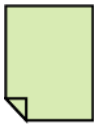

Manual

(PG13.5 1EA)

(PG11.0 2EA)

Cable Grand X3

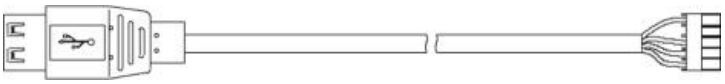

USB Connector Cable (Option)

External Temperature Sensor (Option)

The protection grade of LEVEL HUNTER III is IP65. It is valid before the cable gland hole is made. When the product is delivered to the customers, the cable gland holes are made for user’s convenience.

3.2 Sensor Box Package

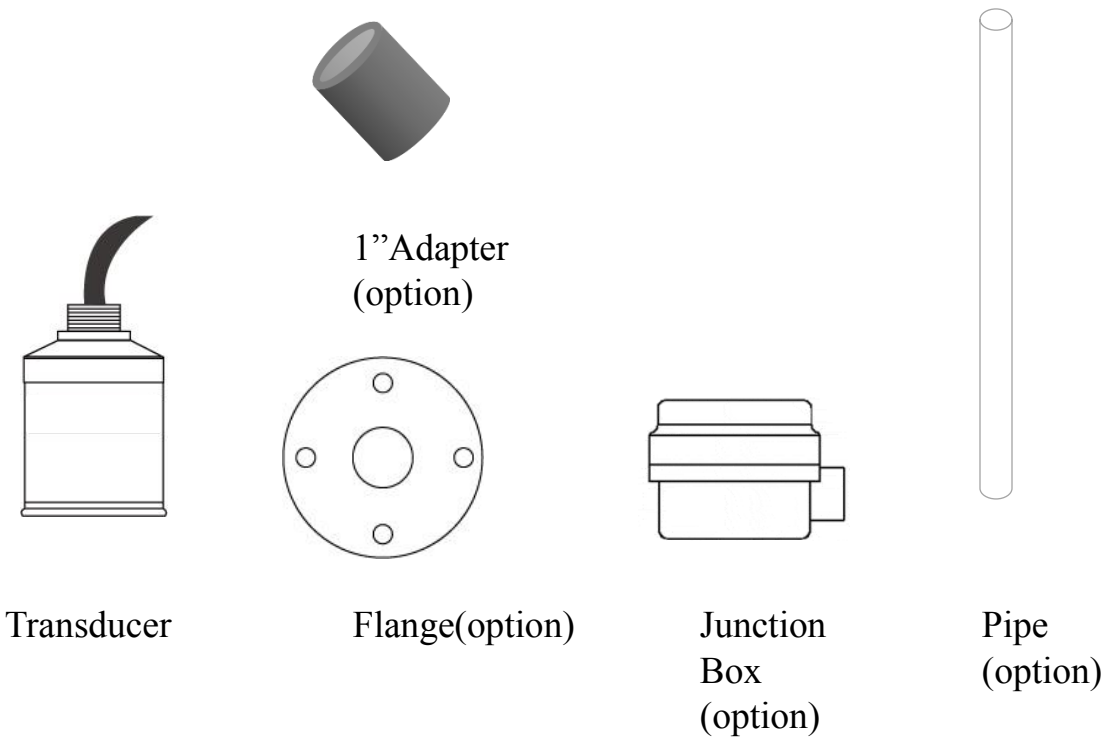

The standard transducer cable length is 10 meters (32ft). The cable length is subject to change as an option if requested when ordering.

4. Dimension

4.1 Controller

1. The enclosure material is polycarbonate and the protection grade is IP65 (NEMA 4X).
2. Using the hole in the back of the controller it is mounted on the wall.

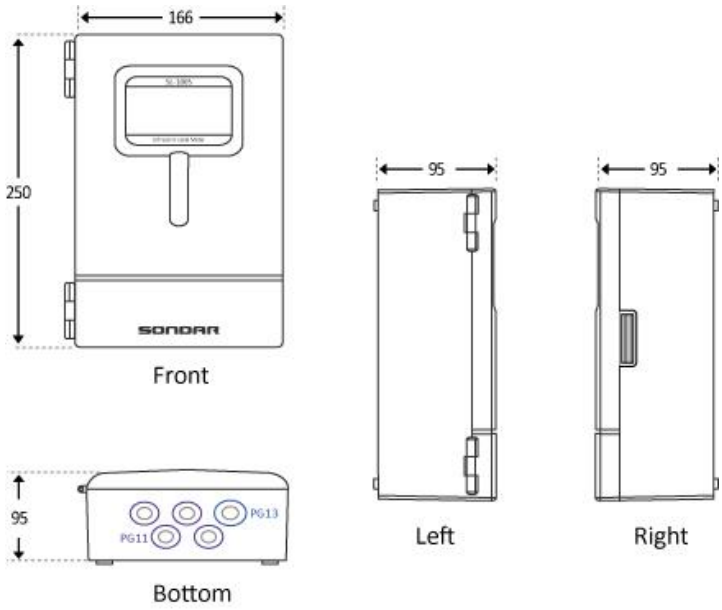

4.2 Sensor

LXD Sensor series are exclusive level sensors for LEVEL HUNTER III. According to the sensor range, it is 05 meters, 10 meters and 15 meters. The temperature is compensated by a built-in temperature sensor. The sensor materials are PP and PVDF. According to the application, the sensor housing material must be selected. Before mounting the sensor, check the chemical compatibility chart.

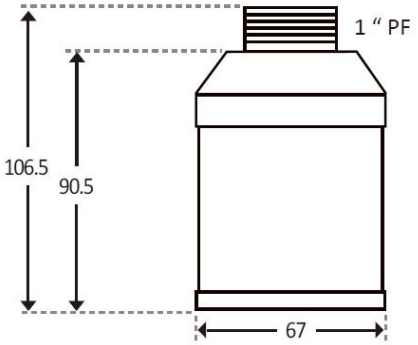

LXD-05

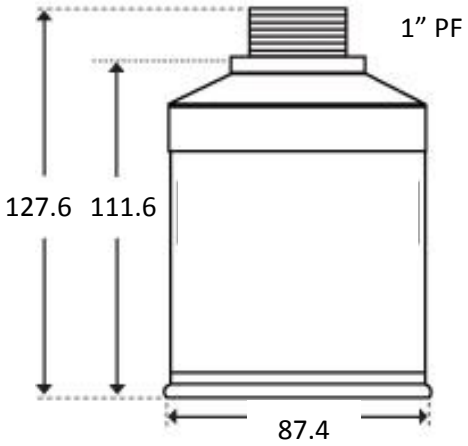

LXD-10

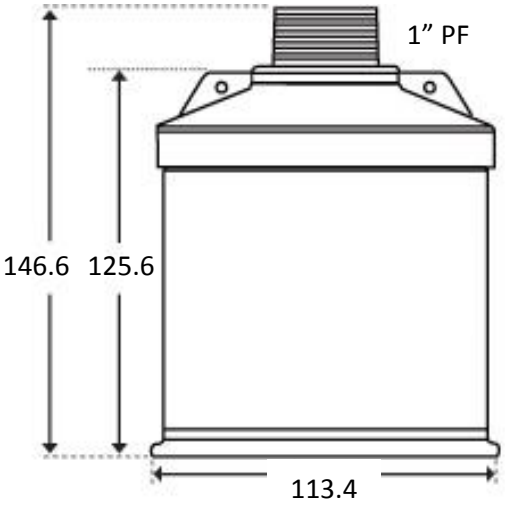

LXD-15

III. Installation

1. General Guide

Before mounting the product, read this manual and specification. It is installed in a place that is within the temperature range specified in this manual and that is suitable to the enclosure rating and materials. If the products are installed improperly, it may cause malfunction.

This is general guide for installing ECHO products.

- ✓ Remove the obstacles in the space between the sensor and the measured target such as ladders, limit switches, heating spirals etc.
- ✓ When mounting the sensor, keep the distance to the vessel wall.
- ✓ The bottom of the sensor should be perpendicular to the surface of water.
- ✓ Do not set the maximum level into the Dead Zone range.
- ✓ Avoid the intense winds and excessive exposure to direct sunlight. The strong winds change the path of ultrasound and may cause a malfunction. If you need to install the unit in a spot exposed to direct sunlight, sun screen must be installed.
- ✓ Keep the distance from the place where are strong noise by high voltage, high current etc.
- ✓ Install the unit in the place that is vibration free.

2. Controller installation

2.1 Environment condition

- ✓ In a place where ambient temperature is between -20 to +60 ° C (-4°F~140°F)
- ✓ In a place required minimum cable length.
- ✓ In a place where it can be operated conveniently
- ✓ In a place out of direct sunlight
- ✓ In a place free from vibration
- ✓ In a place that has sufficient space when its door is opened.

Do not install near high voltage, current runs

or variable frequency motors.

2.2 Installation

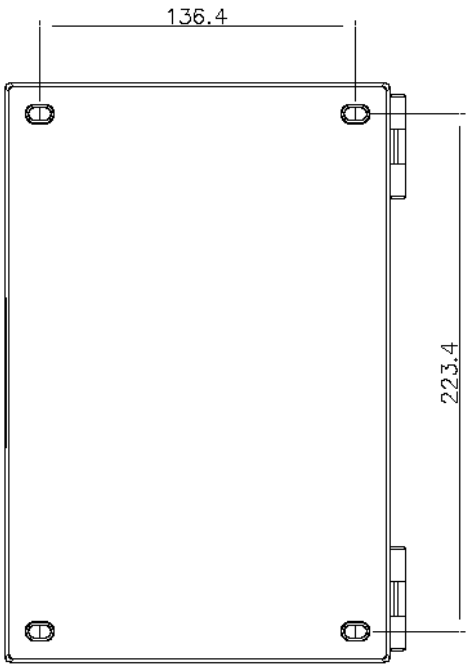

- ✓ Open the controller door and check the four screw holes.
- ✓ Mark and drill four holes in the mounting wall.
- ✓ Fasten the screw bolt by a screwdriver and mount the controller.
- ✓ Check the controller leveled off on the wall.
- ✓ Close the controller door.

3. Sensor Installation

3.1 Environment condition

- ✓ In a place where ambient temperature is between -30 to +70 ° C (-22°F~94°F)
- ✓ Suitable to the housing rating and materials for applications.
- ✓ In a place where is perpendicular to the measuring target surface

3.2 Dead Zone (Near Blanking)

Dead zone is the area which the ultrasonic sensor can't measure. The maximum level shouldn't be reached into the Dead Zone. The echo signal isn't calculated within Dead zone area. Thus the measurement value may not correct.

Sensor Model	Dead zone
LXD-05	0.3 m (11.81in)
LXD-10	0.3 m (11.81in)
LXD-15	0.5 m (19.69in)

The sensor cable should not be laid parallel to high voltage line and nearby frequency converters.

3.3 Beam Space

Make sure there is no interference on the emitted beam space area such as a limit switch, temperature sensors, and ladders. .

Measurement distance	Beam Space(α)
1m	0.09m
2m	0.18m
3m	0.27m
4m	0.36m
5m	0.47m
6m	0.58m
7m	0.70m
8m	0.84m
9m	1.00m
10m	1.19m
11m	1.43m
12m	1.73m
13m	2.14m
14m	2.75m
15m	3.73m

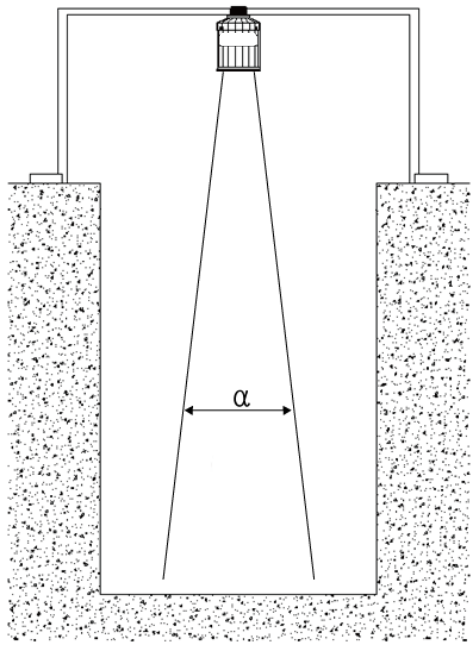

3.4 Installation

Vessel Installation

- Do not install the sensor in the middle of the tank. Keep the distance from the vessel wall over 300mm.
- There should be no interference on the emitted beam path.
- If there is vibration, it could result incorrect measurement value.
- Use a flexible conduit for protecting the sensor cable.
- When using the connection box, the thread size is 1 inch PF.

Nozzle Installation

- When the maximum level is filled over dead zone in the tank, use the pipe nozzle.
- The interior of the nozzle must be smooth and may not contain any edges or welded joints.
- There should be no burr on the inside of the tank side nozzle end.
- For making the pipe nozzle, specify the diameter and length as the table below.

D[mm]	Length L [mm]		
	LXD-05	LXD-10	LXD-15
80	＜180		
100	＜230	＜230	
150	＜350	＜350	＜350
200	＜470	＜470	＜470

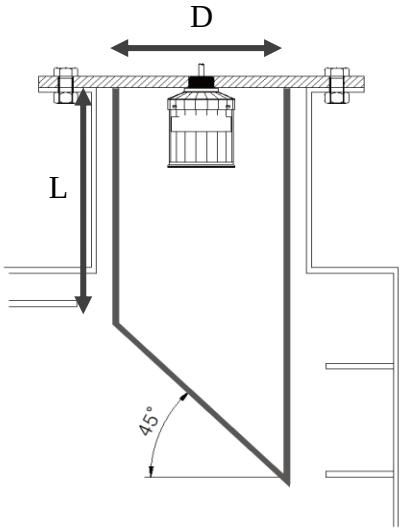

Filling flow Outlet

Do not install the sensor in or above a filling flow outlet.

Secure enough distance from the filling flow.

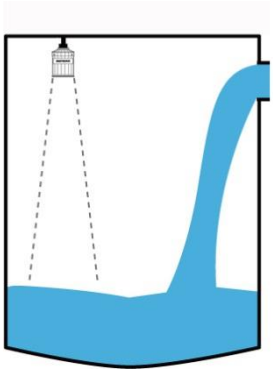

Foam

After filling, stirring and other process in the vessel, dense foams that considerably dampen the emitted signals may form on the surface of the measuring target. It could be result measurement errors. Recommend to use a standpipe.

IV. Wiring

1. Wiring

CONTROL TERMINAL BOARD

There are 39 terminal blocks inside LEVEL HUNTER III. Make sure that all related equipment is connected with each correct terminal block.

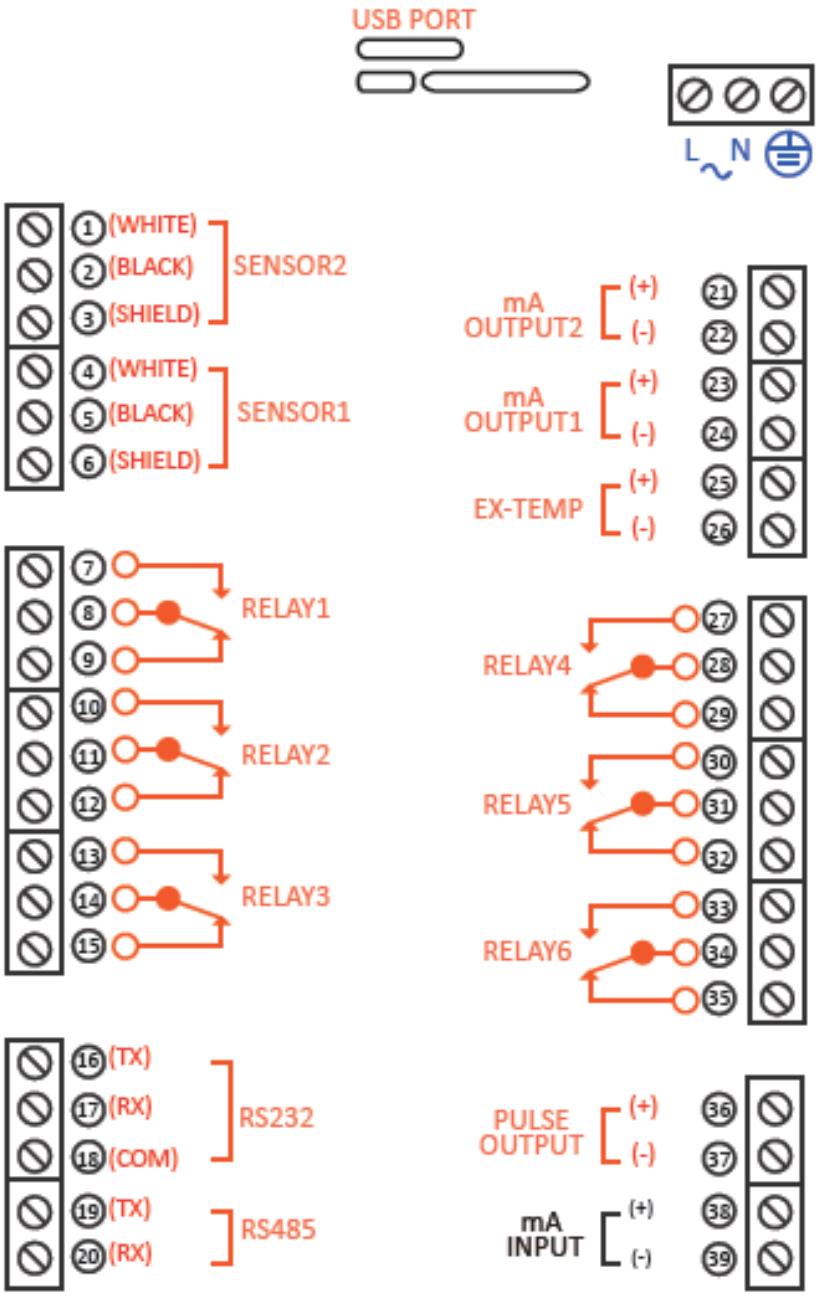

SENSOR

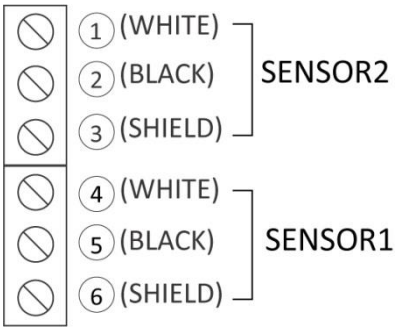

Sensor Channel 1 is selected when ordering LEVEL HUNTER III, SENSOR2 Terminal block is eliminated.

Do not use coaxial cable.

Do not use connect the shield and white transducer wires together

Do not use old version sensors. Connect only the sensors stated in this manual.

Power

The standard power type is AC power. DC power can be selected as an option if requested when ordering. The thickness of the power cable should be more than 0.755SQmm.

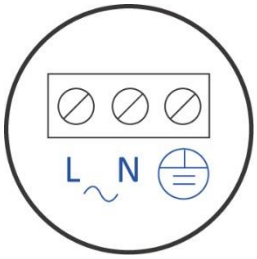

AC Power Terminal

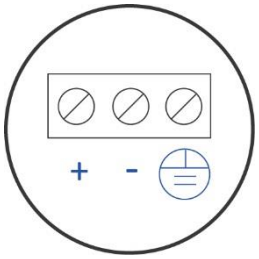

DC Power Terminal

When turning on the power of LEVEL HUNTER III for the first time, make sure any connected devices are disabled until all system functions are confirmed and to be operating properly.

The system must be protected by a 10A fuse; otherwise it should be installed in a place where there is a circuit breaker or switch in the building. The switch must be easily accessible.

Relay

The Relay form is two Form C type. The relays can be wired either normally open or normally closed. The standard model has 3 relays. 6 relays can be selected as an option if requested when ordering.

- Two Form C, NO or NC relays
- 4A at 250Vac

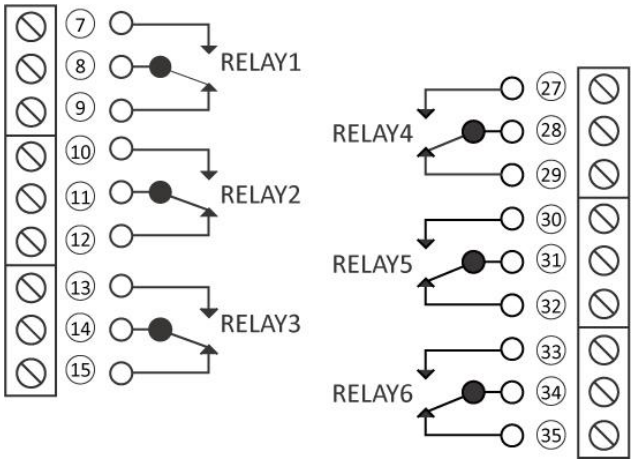

Temperature Sensor

The temperature information is a critical factor for measurement. LXD-05, LXD-10 and LXD-15 sensor has built-in temperature sensor inside the sensor to compensate.

If the ambient temperature is changed rapidly, an external temperature sensor is recommendable.

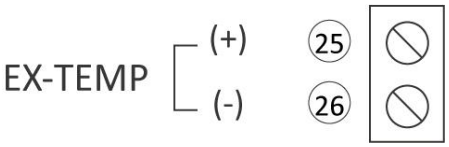

Analog output

mA OUTPUT 1 is the analog output for SENSOR 1. mA OUTPUT 2 is the analog output for SENSOR 2. Make sure that each output is wired to the correct terminal block.

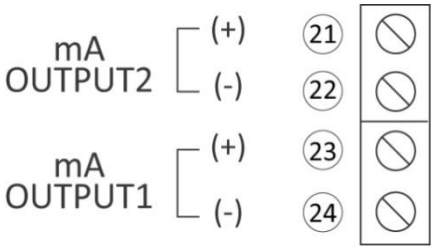

Digital Communication

The standard communication type is RS232. RS485,

Modbus can be selected as an option if requested when ordering.

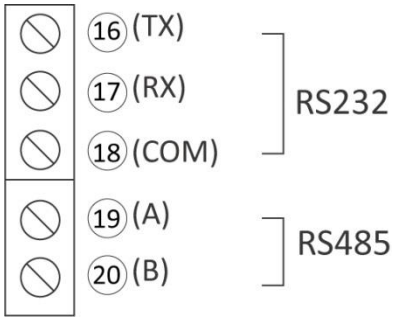

2. Sensor Cable

LXD transducer cable is a shielded two-wire cable. The standard cable length is 10 meters. The cable can be extended by an option when placing the order. When the cable needs to extend with other cable, the cable has to be a shielded two-wire cable, same type.

Recommend to use a grounded conduit and a junction box for cable protection.

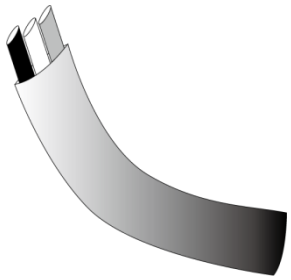

If the standard model is ordered, the end of cable is provided as the picture above.

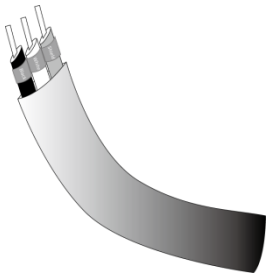

If the cable is ordered more than 1 meter, the end of cable is provided as the picture above.

Do not use a coaxial cable for extension with LEVEL HUNTER III. The extension cable must be used same specification as LXD Series sensor cable

Do not install near high voltage, current runs or variable frequency motors

V. Operation

1. Start-up Display

When LEVEL HUNTER III is powered on, the screen shows as picture.

Ultrasonic Level Meter
LEVEL HUNTER III
Version 1.0.2

2. Display

2.1 Measuring Mode

There are 4 different display types in Measuring Mode. Switch through different display by using up and down buttons. When only SENSOR1 is wired, DISPLAY B and DISPLAY C aren't shown.

DISPLAY A

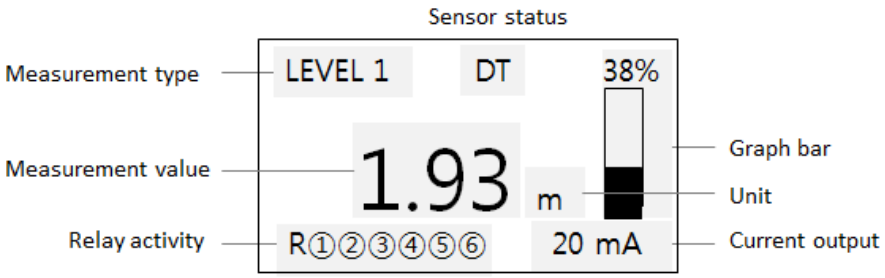

1. It shows the measurement type currently being measured and the sensor No. currently wired.

LEVEL 1	: Level measured by SENSOR1
LEVEL 2	: Level measured by SENSOR2
DISTANCE 1	: Distance measured by SENSOR1
DISTANCE 2	: Distance measured by SENSOR2
SPACE 1	: Space measured by SENSOR1
SPACE 2	: Space measured by SENSOR2
VOLUME 1	: Volume measured by SENSOR1
VOLUME 2	: Volume measured by SENSOR1

2. It shows the current measurement value

3. It shows the relay currently wired.

4. It shows a sensor condition.
   DT: when operating normally
   D: when it receives a reflected signal
   S1: when the measurement value is over than DAMPING SPEED (The value is held)
   S2: when researching the signal
   LE: when the signal is lost

5. It shows the percentage of LEVEL/DISTANCE/SPACE/VOLUME currently being measured.

6. It shows the unit of measurement value.

7. It shows the current output value or ambient temperature.

DISPLAY B

All the factors displayed are the same as those shown DISPLAY A. DISPLAY B shows two sensors measurement at the same time.

When only SENSOR1 is wired, DISPLAY B isn't shown.

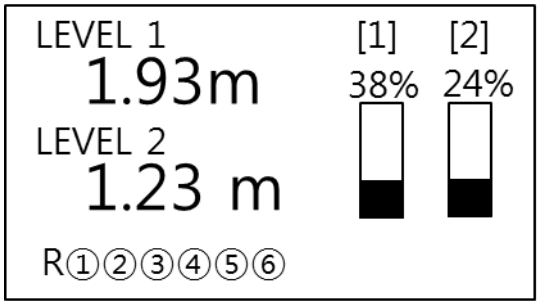

DISPLAY C

All the factors displayed are the same as those shown DISPLAY B. DISPLAY C shows the difference between LEVEL1 and LEVEL 2

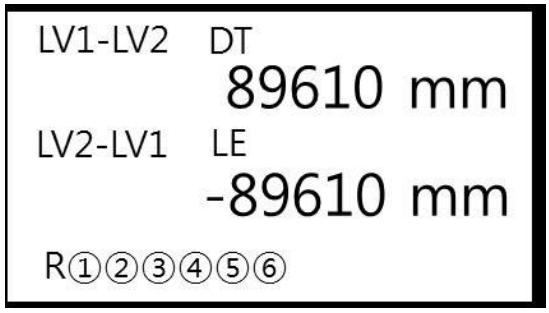

Echo Trend DISPLAY

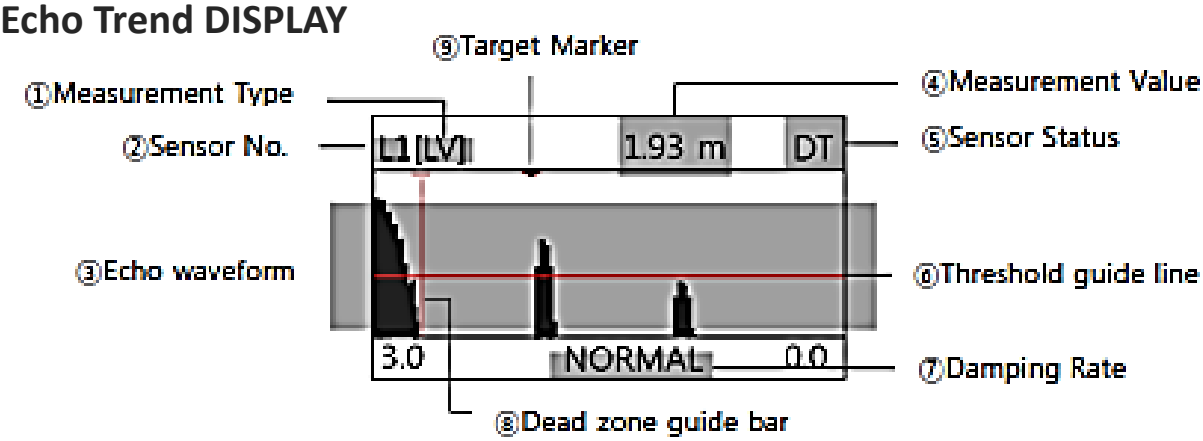

1. It shows the measurement type currently being measured.
   [LV]: LEVEL
   [DIST]: DISTANCE
   [VOL]: VOLUME
   [SPACE]: SPACE

2. It shows the sensor no. currently activated.
   L1: SENSOR 1
   L2: SENSOR 2

3. It shows the echo waveform received by sensor.

4. It shows the measurement value currently measured.

5. It shows the sensor condition.

- DT: when it operates normally
- D: when it receive the reflected signal
- S1: when the measurement value is over than DAMPING SPEED (The value is held)
- S2: when it research the signal
- LE: when it lost the signal

6. It shows the threshold guide line.

7. It shows the damping rate. The Setting Level is as below.

- SLOW
- NORMAL
- FAST
- VERY FAST

8) It shows dead zone point currently being set.

9) It shows the measured level by the target.

Logging Trend DISPLAY

It displays a graph indicating the level trend based on the logging data. When logging is not set, the level trend is not displayed on the screen, there will be a message “there is no data.”

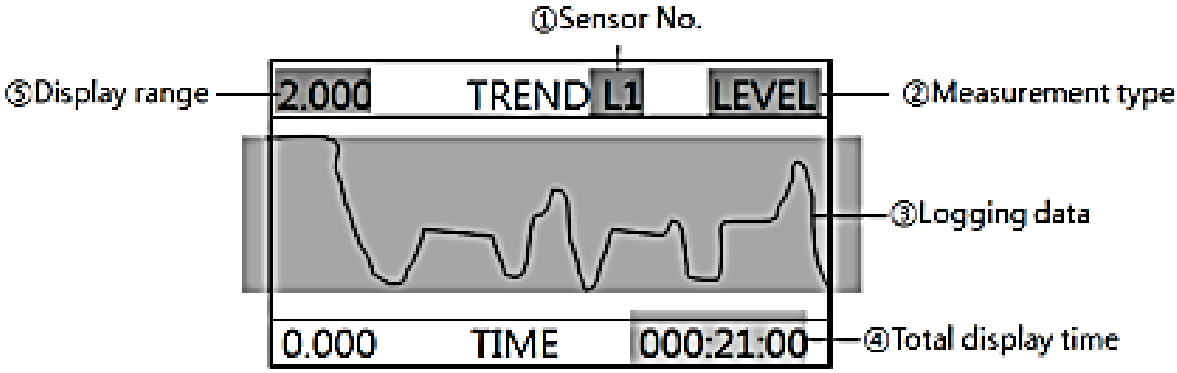

1) It shows the sensor number, currently displaying logging trend.
2) It shows the measurement type, currently being selected.
3) It shows maximum 126 logging data from the current time
4) It shows the total amount of logging time for the displayed data.
(Calculated by multiplying the number of displayed data by the logging interval).
5) It shows the maximum water level from the bottom distance.

- If the Measurement unit or Empty value is changed while the data is logging, the data trend is subject to change based on the changed condition.

2.2 Operating Mode

Operating Mode is to be set the menus for measurement. Operating Mode can be switched by [MENU] button in measuring mode. It shows as the picture as below.

```
1. QUICK SETUP
2. LEVEL METER SETUP
3. LOGGING SETUP
4. SYSTEM SETUP
5. NAVIGATION
```

QUICK SETUP

This menu is the collection of often used menus.

LEVEL METER SETUP

This menu is for detail parameter setup of measurement.

LOGGING SETUP

This menu is for logging data management.

SYSTEM SETUP

This menu is for system setting

NAVIGATION

This menu allows for quick access to specific menus directly by entering the preset menu number.

Refer to the menu list of LEVEL HUNTER III.

3. Buttons

LEVEL HUNTER III has 6 buttons to operate the system and to setup the menus.

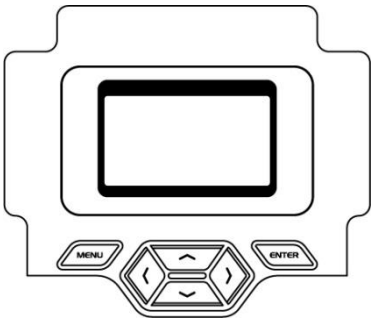

Measuring mode and Operating mode is switched by [MENU] button.

Select a menu in Operating mode.
Complete menu setting

Move up menus or change the parameters on each menu.

Move down menus or change the parameters on each menu.

Return to the previous category

Move the cursor to the left when entering numbers.

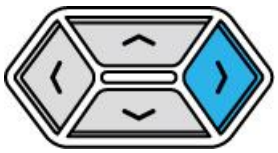

Return to the next category

Move the cursor to the right when entering numbers.

If you press [ENTER] button, after changing the value in Program Mode, every time the user is asked whether the changed value is saved or not. If you select [YES] then the value is changed and Measuring Mode is switched. When you want to change several menus in same directory, press [ENTER] button after all parameters are changed.

VI. Programming

1. QUICK SETUP

QUICK SETUP is the menus frequently used.

Parameters can be set conveniently in short time.

```
[100]QUICK SETUP
SENSOR 1
SENSOR 2
CURRENT SIMULATION
```

The captured menu screen is based on the condition that the sensor channel 1 and the sensor channel 2 are both connected. If the sensor channel 1 is connected only, the screen might display differently.

1) SENSOR 1: The menus for SENSOR1 which is wired at SENSOR1 on the terminal block.

2) SENSOR 2: The menus for SENSOR2 which is wired at SENSOR2 on the terminal block.

3) CURRENT SIMULATION: This menu is that tests the current output of OUTPUT 1 and OUTPUT 2. According to the selection; 3.8mA / 4mA / 12mA / 20mA /22mA, the current output is transferred to the control system.

1.1 SENSOR 1

Set the detail menu of the sensor 1.

```
[110]SENSOR 1
UNIT        m
EMPTY       10.00m
DEAD ZONE   00.30m
4mA OUT     00.00m
20mA OUT    10.00m
```

1) UNIT

This menu is to select the unit of the value being measured.
Measuring range: mm, cm, m, yd, in, ft

Units	
mm	10000
cm	1000
m	10
in	393.70
yd	10.94
Ft	32.81

**Round off the numbers to two decimal places

EMPTY

This menu is for setting the distance between the bottom of the sensor and the bottom of the measured storage when there is empty. The input unit is changed depending on the measurements unit.

Sensor	setting range	Default
LXD-05	0. 30~99.99m	10.00m
LXD-10		
LXD-15	0. 50~99.99m	

The setting value of the bottom distance is mostly maximum measuring range of the sensor. However, the bottom distance could be set as 99.99m depending on the application conditions. The incorrect bottom distance value causes the incorrect measurement.

DEAD ZONE (near blanking)

This menu is for setting DEAD ZONE of a sensor. The ultrasonic sensor is both transmission and reception sensor. The sensor is not able to measure the distance between the surface of the sensor and the certain point. That distance is called DEAD ZONE.

Sensor	Setting range	Default
LXD-05	0. 30~99.99m	0.3m
LXD-10		
LXD-15	0. 50~99.99m	0.5m

4mA OUT

This is a mode for setting a distance that the current output is 4mA. This setting is normally set at the point that the water level is zero.

Sensor	Setting range	Default
LXD-05	-99.99~99.99m	0.00m
LXD-10		
LXD-15		

20mA OUT

This is a mode for setting the distance that the current output is 20mA. This setting is normally set at the point that a water level is Maximum (100%).

Sensor	Setting range	Default
LXD-05	-99.99~99.99m	10.00m
LXD-10		
LXD-15	-99.99~99.99m	15.00m

CAUTION

A DEAD ZONE of 30cm should be excepted when setting 20mA OUT. If the level approaches in the DEAD ZONE, It might be displayed incorrect measurement value instead of the actual measurement level.

1.2 SENSOR 2

It is same as the settings menu of the sensor 1.

1.3 CURRENT SIMULATION

This function can simulate the cable connection status and the current output between the central control room and this device. When you move to the CURRENT SIMULATION menu, the measuring process is stopped and the current output becomes initialized to 0.

```
[130]CURRENT SIMULATION
OUTPUT 1    MEASURE
OUTPUT 2    MEASURE
```

1) OUTPUT 1

When you select a value of the Current Output 1 and 2, it is output by the value of the corresponding current.

- MEASURE
- 3.8mA
- 4mA
- 12mA
- 20mA
- 22mA

2) OUTPUT 2

Same as the OUTPUT 1

2. LEVEL METER SETUP

This menu is for setting the Level, Distance, Volume measuring, Relay, Current Output, and Communication of the sensor.

```
[200]LEVEL METER SETUP
LEVEL
VOLUME
RELAY
CURRENT OUTPUT
COMMUNICATION SETUP
```

2.1 LEVEL

```
[210]LEVEL
SENSOR 1
SENSOR 2
UNIT
```

SENSOR 1

```
[211]SENSOR 1
USE            ENABLE
SENSOR TYPE    LXD-10S
EMPTY          10.00m
DEAD ZONE      00.30m
TX POWER       050
RX GAIN        093
TYPE           LEVEL
N.THRESHOLD    4[0.8V]
F.THRESHOLD    4[0.8V]
TEMP TYPE      INSIDE
TEMP FIX       25.00℃
TEMP           25.00℃
DAMPING        NORMAL
SOUND SPEED    0331.5m/s
SPEED FACTOR   +0.60m/ ℃
LEVEL OFFSET   +000.00m
```

1) USE

This menu is for selecting the sensor use state. If you are using the sensor, please select ENABLE. If you are not using the sensor, please select DISABLE.

2) SENSOR TYPE

This is the menu for selecting the type of the sensor connected.

LXD-05 5m sensor
LXD-10 10m sensor
LXD-15 15m sensor

CAUTION If the wrong sensor is selected, it causes incorrect measurement.

3) EMPTY

This menu is for setting the distance between the bottom of the sensor and the bottom of the measured storage when there is empty. The input unit is changed depending on the measurements unit.

Sensor	Maximum range	Default
LXD-05	0.30~99.99m	10.00m
LXD-10		
LXD-15	0.50~99.99m	15.00m

CAUTION The setting of the EMPTY is normally the maximum measuring range of the sensor. However, it could be set up to 99.99m according to the application conditions.

4) DEAD ZONE (Near Blanking)

This menu is for setting DEAD ZONE of a sensor. The ultrasonic sensor is both transmission and reception sensor. The sensor is not able to measure the distance between the surface of the sensor and the certain point. That distance is called DEAD ZONE.

Sensor	Maximum range	Default
LXD-05	0.30~99.99m	0.3m
LXD-10		
LXD-15	0.50~99.99m	0.5m

5) TX POWER

This menu is for adjusting the strength of the transmission signal output from the ultrasonic sensor. By using the function that adjusts the intensity of the ultrasonic wave generated form the sensor, this product is applicable for the various environments.

[Default setting: 30, Maximum setting range: 1~100]

- 10: When ultrasonic output is weak.
- 30: The general case (Standard mode)
- 50: When ultrasonic output is strong.
- 70: When ultrasonic output is very strong.

6) RX GAIN

This menu is for adjusting the sensitivity of the signal received from the sensor. Attenuation of the ultrasonic signal is occurred depending on the install location, environment, and surface of measurement object. Please to correct this on the basis of the setting of the following criteria.

[Default setting: 85, Maximum setting range: 0~100]

- 30 or less: The Amplification degree is weakest. When the amplification degree of the received signal is about 20dB. (Short-range measurement of enclosed space or underground water pipe.)
- 50: When the amplification degree of the received signal is about 25dB. (Short-range measurement of enclosed space or underground water pipe.)
- 80: The general case. When the amplification degree of the received signal is about 30dB. (Standard mode),
- 90: When the amplification degree of the received signal is about 40dB. (Long-range measurement in open space)
- 95: When amplification degree of the received signal is about 50dB.
  (When there is dust, powder, and solids a risk of diffused reflection of the ultrasonic wave can occur)

The setting range is changed according to the sensor range.

7) Type

This menu is for selecting the type of the measured value to be displayed in the measurement mode.

Distance: Display the distance to the measured object from the sensor bottom

Level: Display the distance to the measurement point from the floor

Space: Display the distance to the measured object, excluding the DEAD ZONE

Volume: Display the capacity of the contents of the tank being measured(Volume)

Differential: Display the difference between the measured value of the sensor channel 1 and the sensor channel 2.

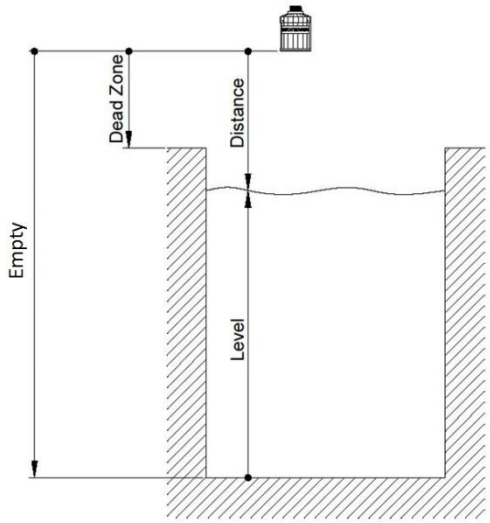

8) N. THRESHOLD (only when 5 meter sensor is used.)

This is the menu for setting the reference signal value of THRESHOLD. The true pulse signal is verified automatically but false pulse signal is caused by an obstruction in the beam space. If the reference value is set, the pulse signals below the reference value will be ignored.

[Default setting: 4(0.8V), Maximum setting range: 1~10]

9) F. THRESHOLD (only when 10 and 15 meter sensor are used.)

This is the menu for setting the reference value used to detect the received signal reflected. To avoid false detection, please set THRESHOLD value high in the noisy environment and please set THRESHOLD value low when environmental noise is low.

[Default setting: 4(0.5V), Maximum setting range: 1~10]

The threshold reference value should be adjusted according to the ambient noise.

10) TEMP TYPE

This is the menu for selecting the type of the temperature value used in the ultrasonic distance measurement.

INSIDE: Use the temperature sensor that is built inside the sensor for ultrasonic measuring.

OUTSIDE: Use the value of the external temperature sensor for ultrasonic measuring. (optional)

FIX: Set a fixed value without using a temperature sensor when the device is used in the places where the temperature is changed rapidly.

CAUTION

When using the external temperature sensor for measurement, TEMP TYPE should be selected as OUTSIDE always. If it is set as OUTSIDE, but the external temperature sensor is not actually connected, it might be displayed incorrect measurement value instead of the actual measurement value.

11) TEMP FIX

This menu is for setting the value of the temperature manually when TEMP TYPE is FIXED.

Sensor	Celsius(℃)	Fahrenheit(℉)
Range	0~60	32~140

12) TEMP

This menu is for checking the temperature value measured currently.

13) DAMPING

This menu is for setting the speed of output change corresponding to the change in water level.

Select Item	Slow	Normal	Fast	Very Fast
Speed	0.1m/min	1m/min	10m/min	100m/min

14) SOUND SPEED

This menu is for setting the sound speed value of the environment used. Please enter 331.5 in general. (in the air) If this product is operated in other gases, please enter the sound speed value of the corresponding gas when the temperature is 0 ℃. (Unit: m/sec)

Name of gas	Sound speed (m/sec)
Chlorine	206
Carbon dioxide	259
Argon	308
Oxygen	316
Air	331.5
Ammonia	415
Ethane	430
Neon	435
Helium	965

15) SOUND SPEED FACTOR

This menu is for setting the sound speed change value due to temperature. Sound speed is changed depending on the temperature. In the air, please enter 0.60 (m / ℃) in general. In the case of special circumstances, please enter the sound speed change value obtained by experiment to obtain an accurate measured value.

16) LEVEL OFFSET

This menu is to add and display a particular value (Offset) for the special environments on the display. The value of the water level is measured in the usual way, and it will display on the screen after being adjusted based on the specific value.

Actual Value	OFFSET	Displayed Value
15M	+10	25M
15M	-10	5M

SENSOR 2

Same as the setting menu of the sensor 1

[213]UNIT	
UNIT	m
TEMP UNIT	℃

1. UNIT

This menu is for selecting the unit that displays the measured value.

Available setting unit: mm, cm, m, in, yd, ft

2. TEMP UNIT

It is a menu for choosing the units that display the temperature value.

You can choose between ℃ and ℉.

2.2 VOLUME

VOLUME is the capacity of the contents of the tank that being measured currently. When measuring VOLUME, unit mm, cm, and m are converted to m^3, and unit in, yd, ft are converted to gallon automatically.

[220]VOLUME
TYPE
VARIABLE
LEVEL TABLE
VOLUME TABLE
VOLUME SIMULATION

Type

TANK TYPE

This menu is for selecting the shape of the tank.

- VERTICAL CYLINDER
- HORIZONTAL CYLINDER
- SPHERE
- USER DEFINE

VERTICAL, this type is applied to the cylinder only, and not applies to other tank.

HORIZONTAL type is applied to the cylinder only, and not applied to other tanks.

HEAD TYPE

This menu is for selecting the HEAD TYPE of the tank.

- CONICAL HEAD
- ELLIPSOIDAL HEAD
- GUPPY HEAD
- SPHERICAL HEAD
- FLAT HEAD

BOTTOM TYPE

This menu is for selection the bottom type of the tank.

- CONICAL BOTTOM
- ELLIPSOIDAL BOTTOM
- SPHERICAL BOTTOM
- FLAT BOTTOM

VERTICAL CYLINDER TANK TYPE

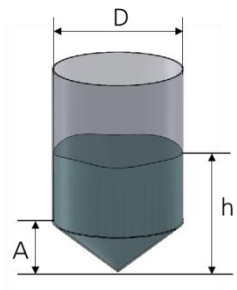

CONICAL BOTTOM TYPE

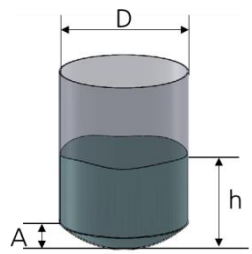

ELLIPSOIDAL BOTTOM TYPE

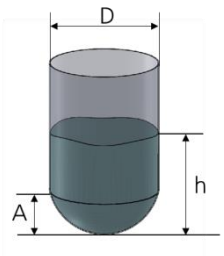

SPHERICAL BOTTOM TYPE

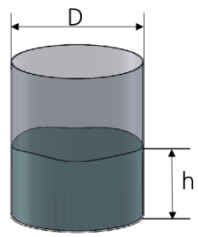

FLAT BOTTOM TYPE

D: Diameter of the tank

A: Distance of BOTTOM

h: Measured level

HORIZONTAL CYLINDER TANK TYPE

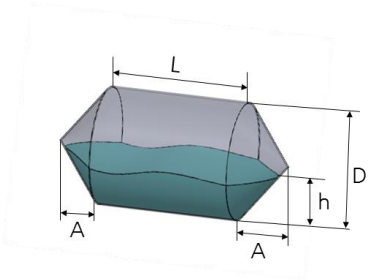

CONICAL HEAD TYPE

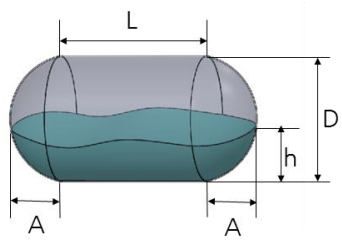

ELLIPSOIDAL HEAD TYPE

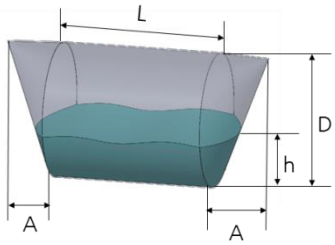

GUPPY HEAD TYPE

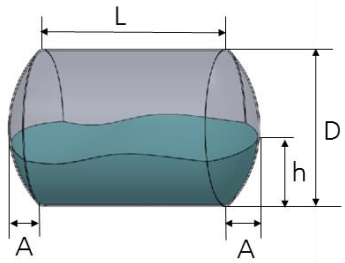

SPHERICAL HEAD TYPE

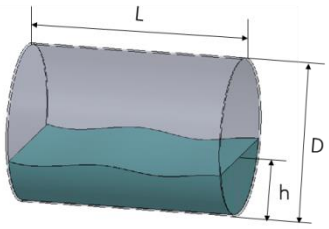

FLAT HEAD TYPE

D: Diameter of the tank

L: The length of the straight section

A: Distance of HEAD

h: Measured level

SPHERE TANK TYPE

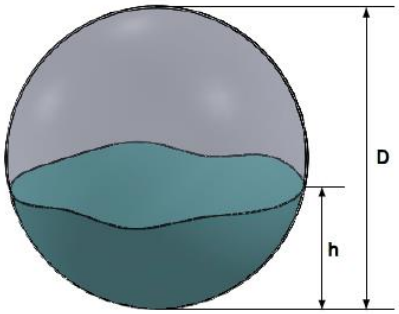

D: Diameter of the tank

h: Measured level

VARIABLE

[222]VARIABLE	
D	05.00m
L	10.00m
A	+00.50m

D= This is the menu to enter the diameter of the tank. If you use the SPHERE TANK, please enter 2r as value.

L= This menu is to enter the length of the straight section of the HORIZONTAL CYLINDER.

A= This menu is to enter the length of the HEAD and the BOTTOM of the VERTICAL CYLINDER and HORIZONTAL CYLINDER.

LEVEL/ VOLUME TABLE

This menu is used when setting the type of tank as USER DEFINE.

[223]LEVEL TABLE	
INDEX 1	00.00m
INDEX 2	00.00m
INDEX 3	00.00m
•••	
INDEX 29	00.00m
INDEX 30	00.00m

INDEX

This menu is for setting the point of 30 places within the tank. LEVEL value and VOLUME value at each point is entered in the same INDEX and saved as TABLE.

VOLUME SIMULATION

```
[225]VOLUME SIMULATION
LEVEL        00.00m
VOLUME       0.00m3
MAX VOLUME   196.35m3
RATIO        0.0
```

LEVEL

This menu is for setting the certain LEVEL value that is used to calculate VOLUME.

VOLUME

This menu is for the output the VOLUME value that is calculated by the LEVEL value that was entered.

MAX VOLUME

This menu is for the output the MAX VOLUME of the tank that set currently.

RATIO

This menu is for the output the VOLUME and MAX VOLUME.

2.3 RELAY

```
[230]RELAY
RELAY 1
RELAY 2
RELAY 3
RELAY 4
RELAY 5
RELAY 6
RELAY SIMULATION
```

Relay 1-6

```
[231]RELAY 1
FUNCTION     NONE
OPERATE      SENSOR 1
GROUP        1
ON POINT     00.00m
OFF POINT    00.00m
```

FUNCTION

This menu is for selecting RELAY use state.

- NONE: No use of this RELAY
- LIMIT: Operate each RELAY depending on the value of the ON / OFF.
- ALTERNATE: Operate RELAY in sequence on the basis of the measured value and the ON / OFF POINT value of the group that has been set. (Ex) If there are RELAY1 and RELAY 2 at the GROUP1, RELAY 1 is working to the first ON / OFF point and then RELAY 2 is working at the second ON / OFF point.
- ALARM: This menu is for generating alarm signals when errors that caused by error on the Fail Safe Time value occurs consistently.

OPERATE

This menu is for selecting the applicable sensors working on each relay.

Selection

• SENSOR1, SENSOR2: Operating RELAY by using the measured value of each sensor.

• SEN1-SEN2, SEN2-SEN1: Operating RELAY by using the difference in the measured values between SENSOR1 and SENSOR2.

• AVERAGE CH: Operating RELAY by using an averaged measurement value between SENSOR 1 and SENSOR 2.

- When the sensor is not selected correctly or when the sensor use is selected "Disable", RELAY for SEN1-SEN2, SEN2-SEN1, AVERAGE_CH is not operated.

GROUP

This menu is for setting a group for ALTERNATE.

Selection range: 1~3

ON POINT

This menu is for setting a point that RELAY is ON.

If OFF POINT is less than ON POINT, RELAY become ON when the measured value is bigger than ON POINT. If OFF POINT is bigger than ON POINT, RELAY become ON when the measured value is less than ON POINT.

OFF POINT

This menu is for setting a point that RELAY is OFF.

If OFF POINT is less than ON POINT, RELAY become OFF when the measured value is less than OFF POINT. If OFF POINT is bigger than ON POINT, RELAY become ON when the measured value is bigger than OFF POINT.

RELAY SIMULATION

The ON / OFF test of RELAY is available.

```
[237]RELAY SIMULATION
RELAY 1      OFF
RELAY 2      OFF
RELAY 3      OFF
RELAY 4      OFF
RELAY 5      OFF
RELAY 6      OFF
```

2.4 CURRENT OUTPUT

This menu is for setting that is needed to convert the measured value to current output.

```
[240]CURRENT OUTPUT
CURRENT OUTPUT 1
CURRENT OUTPUT 2
CURRENT SIMULATION
```

CURRENT OUTPUT 1

[241]CURRENT OUTPUT 1	
INPUT	Sensor 1
4mA OUT	00.00m
20mA OUT	10.00m
ERROR	22mA

- INPUT=SENSOR 1, SENSOR 2, SEN1-SEN2, SEN2-SEN1, AVERAGE CH.
- 4mA= enter the minimum level that the current output is 4mA.
- 20mA= enter the maximum level that the current output is 20mA.
- ERROR= setting the operation of the current output when an error occurs.
- 3.8Ma
- HOLD
- 22mA

CURRENT OUTPUT 2

Same process as the CURRENT OUTPUT 1

CURRENT SIMULATION

[243]CURRENT SIMULATION	
OUTPUT 1	MEASURE
OUTPUT 2	MEASURE

This menu is that displays the output of CURRENT OUTPUT SENSOR1 and SENSOR2 as selected value.

MEASURE
3.8mA
4mA
12mA
20mA
22mA

2.5 COMMUNICATION SETUP

[250]COMMUNICATION SETUP
RS-232 SETUP
RS-485 SETUP

RS-232 SETUP

[251]RS-232 SETUP	
USE	ENABLE
BAUDRATE	9600
PARITY	NONE
STOP BIT	1
DATA BIT	8
PROTOCOL	ISTEC

1) USE

This menu is for selecting the RS-232 use state.

ENABLE / DISABLE

BAUDRATE

This menu is for selecting the transmission speed of RS-232.

- 4800 bps
- 9600 bps
- 14400 bps
- 19200 bps
- 38400 bps
- 57600 bps
- 115200 bps

PARITY

This menu is for selecting the Parity bit use state.

- None
- Odd
- Even

STOP BIT

This menu is for selecting the size of the STOP BIT of RS-232 data transmission.

- 1 bit (default)
- 2 bit

DATA BIT

This menu is for selecting the size of the transmission data of RS-232.

- 8 bit (default)
- 9 bit

PROTOCOL

This menu is for selecting the protocol of the measurement data that is output by RS-232.

- ECHO
- BKCM
- Modbus – RTU
- Modbus–ASCII

The protocol list can be different according to the communication option when you ordered.

RS-485 SETUP

```
[252]RS-485 SETUP
USE          ENABLE
BAUDRATE     9600
PARITY       NONE
STOP BIT     1
DATA BIT     8
PROTOCOL     ISTEC
```

The setting method is the same as the RS-232 SETUP

3. LOGGING SETUP

This menu is for setting LOGGING PERIOD, LOGGING ERASE, USB LOGGING.

```
[300]LOGGING SETUP
LOGGING PERIOD
LOGGING ERASE
USB LOGGING
```

3.1 LOGGING PERIOD

This menu is for setting the Logging period of measurement data.

```
[310]LOGGING PERIOD
LOGGING PERIOD
        NONE
```

- NONE
- 10 SEC
- 1 MINUTE
- 5 MINUTE
- 10 MINUTE
- 15 MINUTE
- 30 MINUTE
- 60 MINUTE

Maximum storage period according to the data logging period (16,128 points)

Data logging period	Maximum storage period
NONE	-
10 SEC	2 days
1 MINUTE	11 days
5 MINUTE	56 days
10 MINUTE	112 days
15 MINUTE	168 days
30 MINUTE	336 days
60 MINUTE	672 days

3.2 LOGGING ERASE

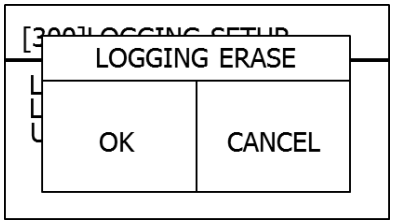

If you select LOGGING ERASE, Screen will be displayed as shown in [Figure 6-25]. By selecting OK, it initializes the saved logging.

3.3 USB LOGGING

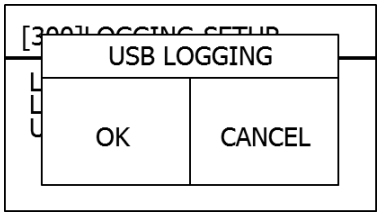

When USB is connected, screen will be displayed as shown in [Figure 6-26].

By selecting OK, it transfers logging data to USB as EXCEL file.

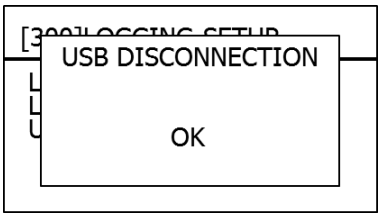

When USB is not connected, screen will be displayed as shown in the picture below. Please connect USB, and then click the OK button, the error pop-up will disappear.

4. SYSTEM SETUP

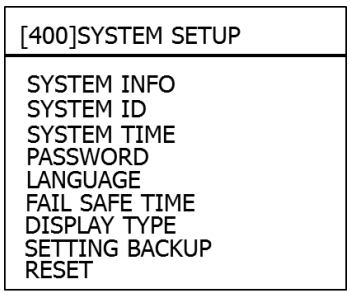

4.1 SYSTEM INFO

```
[410]SYSTEM INFO
VERSION      0.0.1
SYSTEM ID    0
UNIT         METER
```

<u>This menu is for showing system information.</u>

Version: Firmware version

SYSTEM ID: System ID for ECHO protocol

UNIT: Measurement unit selected by a user

4.2 SYSTEM ID

```
[420]SYSTEM ID
SYSTEM ID    0
MODBUS ID    001
```

SYSTEM ID

This menu is for setting the SYSTEM ID to be used for ECHO Protocol.

SYSTEM ID: 0 ~ 99

MODBUS ID: 1~247

Modbus ID

This menu is for setting the Slave ID required when using Modbus Protocol.

4.3 SYSTEM TIME

```
[430]SYSTEM TIME
SYSTEM TIME
    JAN/01/2013/05:54
```

This menu is for setting the system time. By using the Left / Right direction button, move the cursor to the year / month / day / hour / minute, change the setting using the Up / Down direction button.

Setting range: JAN/01/2000 00:00 ~ DEC/31/2099 23:59

4.4 PASSWORD

```
[440]PASSWORD
PASSWORD
        0000
```

This menu is for setting a password by its user. No password is set at the factory. After you set a password, you must enter the password each time there is a menu change.

Password setting range: 0000~9999

CAUTION

User can't configure the menus when user forgets the password.
Please note password number and pay attention not to lose it.

4.5 LANGUAGE

This is the menu for setting the system language.
The current support language is English only.

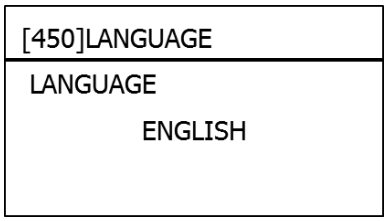

4.6 FAIL SAFE TIME

This menu is for setting the length of time for the alarm when the device malfunctions or there is no receiving signal.

[Default setting: 300sec, Setting range: 20 ~ 999sec]

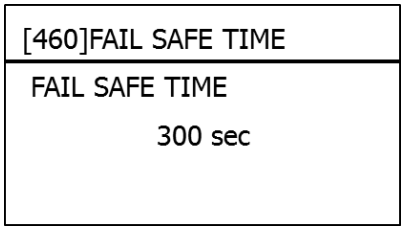

4.7 DISPLAY TYPE

This menu is for selecting the display option in DISPLAY A. The ambient temperature or the current output can be displayed by user's selection.

Setting range: TEMP or CURRENT

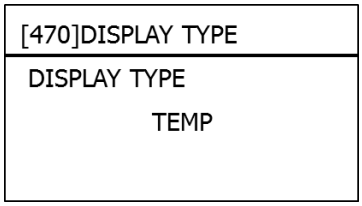

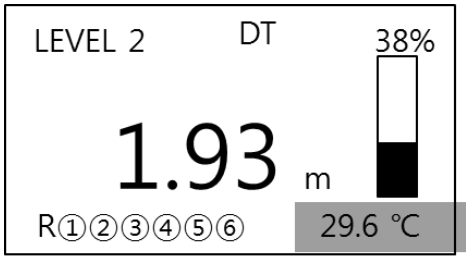

4.8 SETTING BACKUP

This menu is for saving the menu setting value by user. When user select menu, screen will be displayed as shown in picture below.

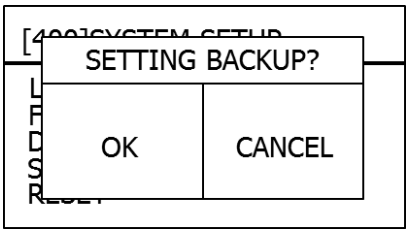

4.9 RESET

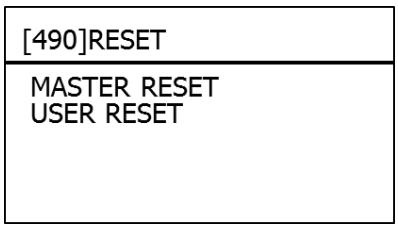

MASTER RESET

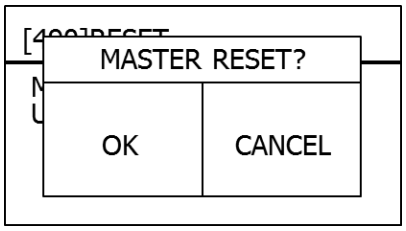

This menu is for resetting the device that is currently operating. If you select MASTER RESET function, the device will be initialized as default setting.

USER RESET

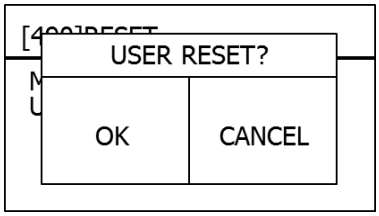

This menu is for resetting the device that is currently operating. If you select USER RESET, the device will be initialized as menu value that is stored at SETTING BACKUP.

6.5 NAVIGATION

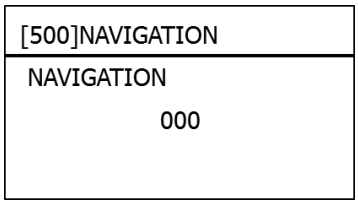

This menu allows for quick access to specific menus directly by entering the preset menu number. Refer to the menu list of the LEVEL HUNTER III.

Ex) If you want to move to the menu of LOGGING PERIOD, please enter menu number [310]. By entering menu number [310], you can access LOGGING PERIOD menu immediately.

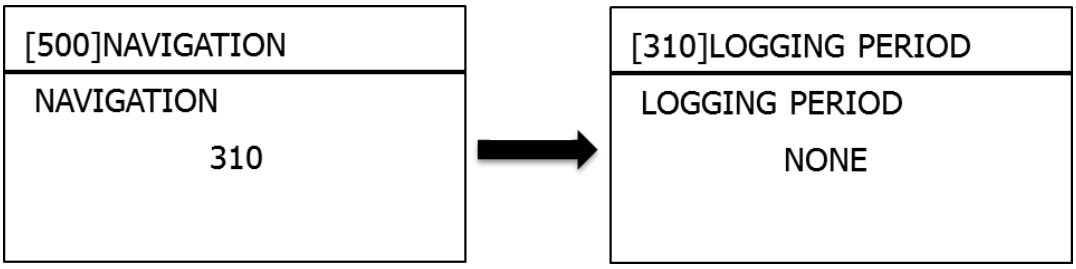

VII. Maintenance

Regular Inspection

- There are no contaminants on the surface of sensor.
- Current output is working in the normal range of 4-20mA.
- Value displayed at the screen is same as actual level value.
- Rating power supply is approved.

1. Battery

The battery which is equipped on the main board of LEVEL HUNTER III is CR-2032 from Maxwell Co. The normal product life is around 10 years but it is subject to change by the environment and operating condition. The life can be shortened. Before the battery is out, check it regularly and change it.

CAUTION

If the battery is out, the time data cannot back-up.

The battery brand and specification will be subject to change without prior notice.

2. SENSOR

- Check the sensor cable regularly.
- Check the sensor bottom for contaminants and clean the bottom of the sensor.

3. Firmware upgrading

LEVEL HUNTER III provides the firmware upgrading by a user.

Duplicate the firmware to download at the highest folder of USD memory. (File system: FAT32).

Connect the USB memory to the Controller. Keep pressing the ENTER key and turn on the power.

Firmware can be downloaded now.

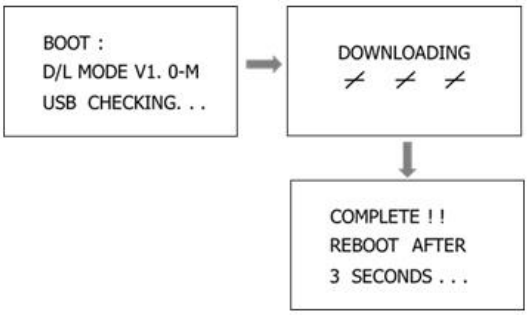

Firmware Download Error:

1. There is no Firmware file in the USB memory.

```
ERROR : 001
FILE NOT FOUND
USB CHECKING . . .
```

2. The downloaded firmware isn't for LEVEL HUNTER III.

```
ERROR : HW MODEL
```

There are two different types of Firmware version for LEVEL HUNTER III. One is for Serial Version and the other is for Mod-bus version. It is distinguished by the firmware name. If the alphabet is "M" is for Mod-bus version and if the alphabet is "S", is for RS 232 or 485. The mismatched firmware isn't upgraded automatically.

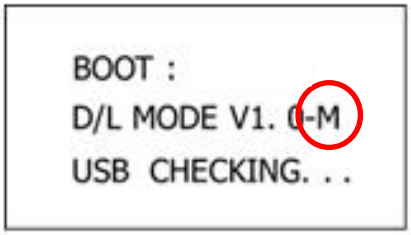

4. Warranty Period

Warranty period is 1 year for LEVEL HUNTER III but if the problem is caused by user's fault or misuse, the repair charge will be incurred.

5. Repair Service

If a problem occurs in the product, the error code is displayed on the screen. This shows what the problem may be. The error code information can be found in this manual. Conduct every process by the trouble shooting guide in this manual, if the problem still exists, contact ECHO PI customer care.

If the product is sent for repair, a RMA must be requested before it can be sent in.

Despite of being in warranty period, if the problem is caused by user's fault or misuse, repair charge will be incurred.

VIII. Trouble shooting

If a problem occurs in your LEVEL HUNTER III, an error code is displayed on the screen, it shows what the problem may be. The error code information can be found below.

Error code list

ERROR CODE	CAUSE
E1101	Not connected SENSOR1
E2101	Not connected SENSOR2
E0101	Not connected SENSOR1 and SENSOR2
E1102	Temperature error of SENSOR1
E2102	Temperature error of SENSOR2
E0102	Temperature error of SENSOR1 and SENSOR2
E0401	External Temperature sensor Error
E0210	Flash memory error
E0202	EEPROM error
E0203	Real time clock error
E1204	The received signal of SENSOR1 is abnormal
E2204	The received signal of SENSOR2 is abnormal
E0204	The received signal of SENSOR1 and SENSOR2 is abnormal

E1101

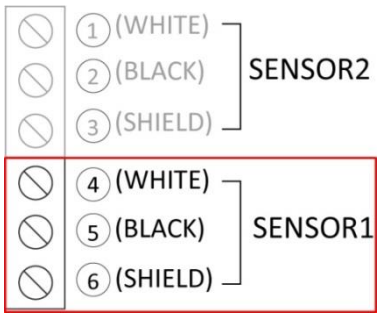

This error appears when sensor 1 is not connected to the terminal or if it is connected to the terminal incorrectly. Please proceed as follows to solve this problem.

When the sensor doesn't make a sound/pulse

1. Please check that you can hear the sound emitted from the ultrasonic sensor. If you cannot hear the pulse, please refer to (2). If you can hear the sound, please refer to (5).

2. Please check the sensor cable (white, black) visually or by using Multi-meter if it is cut or shorted. If you find a problem, please repair or replace the cable. If the problem has not been solved yet, please refer to (3)

3. Please check that the sensor cable (white, black) is properly connected on the terminal at the exact position. If it is not, please connect the sensor cable properly.

4. If the problem has not been solved yet even though you have confirmed the process above (2) and (3), please contact our service center or your local dealer.

When the sensor makes sound/pulse

5. If you can hear the sound emitted from the ultrasonic sensor, please check the strength of the transmitted signal at the Echo Trend graph on the screen. You can suspect a faulty sensor if the transmitted signal is weak or received signal shows lower waveform than the Threshold value.

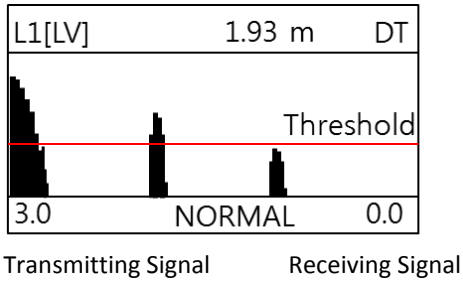

Normal condition

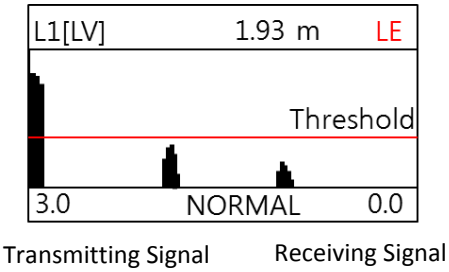

Abnormal condition

*** To see Echo Trend graph, press the [down] button on the Measuring Mode till the graph shows up on the screen.*

6. If there is a spare sensor, please replace it with other sensors and test again. If the changed sensor operates properly, the sensor is defective. If it doesn't operate normally even if the other sensor has been replaced, you should check the controller.

7. If you don't have a spare sensor, the faulty sensor needs repair or replaced. Please contact our service center or your local dealer. 850-609-1300

E2101

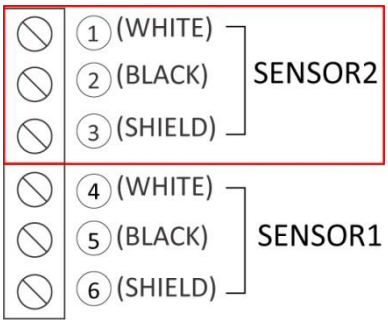

This error appears when sensor 2 is not connected to the terminal or if it is connected to the terminal incorrectly. Please proceed as follows to solve this problem.

Processing method is the same as E1101.

E0101

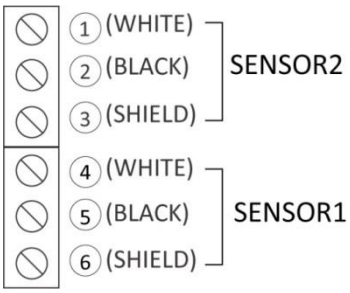

This error appears when sensor 1 and sensor 2 are not connected to the terminal or connected to the terminal incorrectly.

Please proceed as follows to solve this problem.

Processing method is the same as E1101.

E1102

This error appears when the built-in temperature sensor in sensor 1 is not operating properly. The value of the temperature on the screen could be displayed abnormally. Please proceed as follows to solve this problem.

When the sensor doesn't make a sound/pulse

1. Please check that you can hear the sound emitted from the ultrasonic sensor.
If you cannot hear the sound, please refer to (2). If you can hear the sound, please refer to (5).

2. Please check the sensor cable (white, black) visually or by using a Multimeter if it is cut or shorted. If you find a problem, please repair or replace it. If the problem has not been solved yet, please refer to (3)

3. Please check that the sensor cable (white, black) is properly connected on the terminal at the exact position. If it is not, please connect the sensor cable properly.

4. If the problem has not been solved even though you have confirmed through the process (2) and (3), please contact our service center or your dealer.

When the sensor makes sound radiation

5. If you can hear the sound emitted from the ultrasonic sensor, please check the color of the sensor cable (black & shield) that's connected to the terminal block. If it is not connected correctly, please re-assemble according to the color.

6. Please check the sensor connections to the terminal block or check the bolt if it is correctly fastened to the terminal block. If reconnection is needed, please reconnect it properly.

7. If the problem has not been solved even though you have confirmed the process above in (5) and (6) please check the resistance of cable (black & shield). At room temperature, it is normal for the resistance value to be within about 9kΩ ~ 15kΩ. If the resistance value is over this range, the built-in temperature sensor is defective. A faulty sensor needs repair or replacement. Please contact our service center or your local dealer.

8. If there is an external thermometer, you can use it instead of the built-in temperature sensor. When you change the temperature sensor, you have to change the menu option as well. The menu view is as follows.

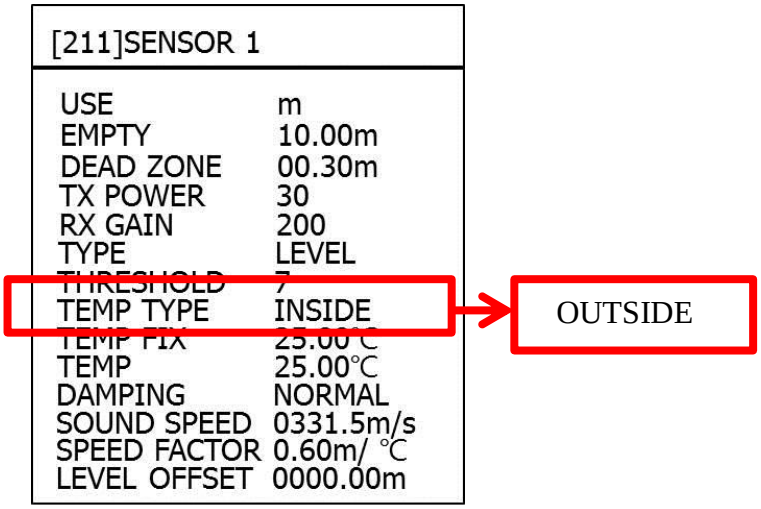

E2102

This error appears when the built-in temperature sensor in sensor 2 is not operating properly. The value of the temperature on the screen could be displayed abnormally. Please proceed as follows to solve this problem.

Processing method is the same as the E1102.

E0102

This error appears when the built-in temperature sensor in sensor 1 and sensor 2 are not operating properly. The value of the temperature on the screen could be displayed abnormally. Please proceed as follows to solve the problem.

Processing method is the same as the E1102.

E0401

This error appears when an external thermometer that's connected to the controller is not operating properly. Please proceed as follows to solve this problem.

When the temperature type is selected incorrectly in the menu

1. If you select "OUTSIDE" on the TEMP TYPE when setting the menu of the sensor, the value is measured based on the temperature value that measured by the external temperature sensor. Please check if you chose "OUTSIDE" instead of "INSIDE" on the TEMP TYPE menu even though an external temperature sensor is not connected.

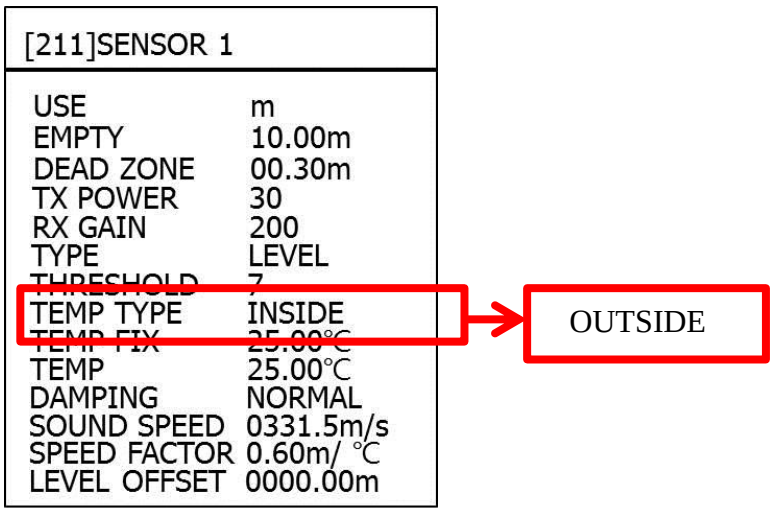

When the temperature sensor is connected incorrectly

2. Please check the sensor cable visually or by using a Multimeter if it is cut or shorted. If you find a problem, please repair or replace it. If the problem has not been solved yet, please refer to (3)

3. Please check that the sensor cable for proper connection on the terminal at the exact position. If you find a problem, please connect the sensor cable properly.

4. If the problem has not been solved even though you have confirmed the process above (2) and (3), please contact our service center or your local dealer.

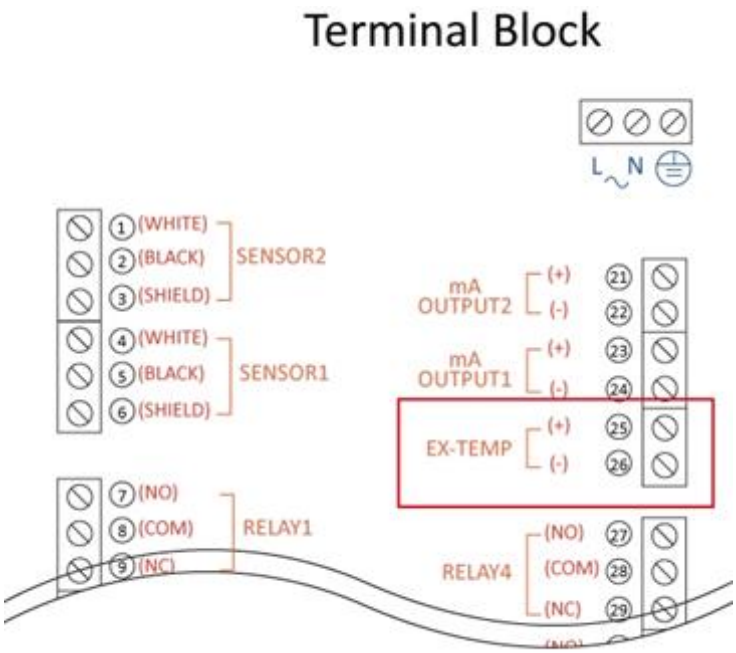

E0201

This error appears when the flash memory inside controller is not operating properly. Please proceed as follows to solve the problem.

Logging data Recovery

If the flash memory is defective, it is difficult to recover the stored data. For the recovery of the lost data, you will need to send the product to our service center for repair.

Memory Reset

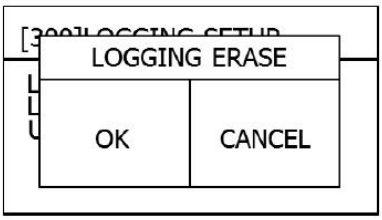

1. Please try to reset the flash memory at the menu.

2. Please refer to the menu directory as follows. All data will be deleted and the memory will be rest.

3. If the problem continues, please contact our service center or your local dealer.

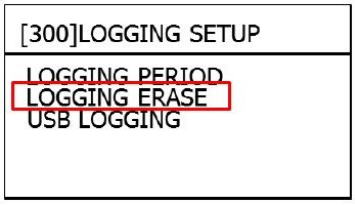

E0202

1. This error appears when the EEPROM memory inside controller is not operating properly. Please proceed as follows to solve the problem.

2. Please contact our service center immediately. Do not attempt to fix it yourself

(EEPROM memory stores the important information about the product and cannot be handled by non-experts. If you need specific inspection and repair, please contact our service center or your local dealer.)

E0203

This error appears when the REAL TIME CLOCK inside of the controller is not operating properly. Please proceed as follows to solve the problem.

1. Please contact our service center immediately. Do not attempt to fix it yourself

2. REAL TIME CLOCK is sensitive and cannot be handled by non-experts. If you need specific inspection and repair, please contact our service center or your local dealer.

E1204

This error appears when the received signal from sensor 1 is abnormal. “LE” will be flashing on the screen. Please proceed as follows to solve the problem.

1. Check the installation position of the sensor

2. Please check the strength of the received signal at the Echo Trend graph on the screen. If the received signal shows lower waveform than the default Threshold value, please check the installation location of the sensor.

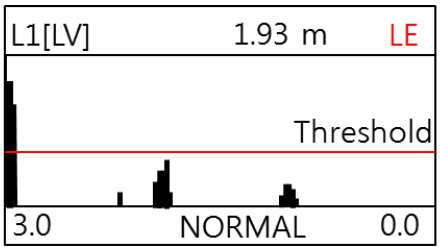

Transmitting Signal Receiving Signal

*** To see Echo Trend graph, press the [down] button on the Measuring Mode till the graph shows up on the screen.*

3. Please make sure that the sensor is installed perpendicularly to the object you're measuring. If it is not, please reinstall it correctly.

4. Check the contamination on the bottom of the sensor

5. Please check if there is a contaminant adhering to the radiating surface. If the radiating surface is contaminated, please wipe it with a soft cloth.

Adjust settings menu corresponding to the measurement object

6. Please check if the measuring material is an absorber (foam, sludge). If it is, the received signal is lower than normal conditions. Please adjust TX POWER, RX GAIN, and Threshold value at menu [211] to set an appropriate status for your environment/material.

TX POWER: Please change the default value from 30 to 50 ~ 70

RX GAIN: Please change the default value from 85 to 90 ~ 95

7. If "LE" appears on the screen repeatedly and the received value is lower than Threshold value, please change the default Threshold value from 4(0.8V) to 3(0.5V). If it is operating normally, "DT" will be displayed on the screen during normal operation.

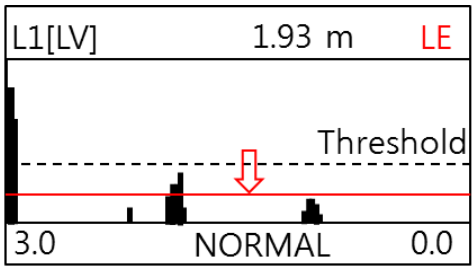

Transmitting Signal Receiving Signal

*** To see Echo Trend graph, press the [down] button on the Measuring Mode till the graph shows up on the screen.*

8. Check the bottom distance setting

9. Please check that the value of the EMPTY has been set within the range.

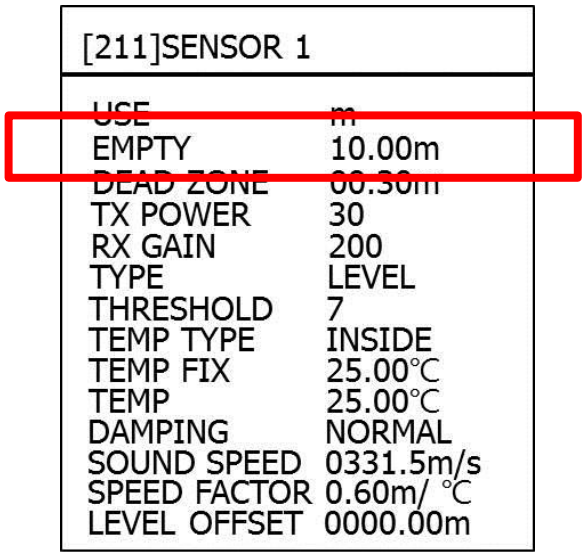

10. If the problem keeps occurring, please contact our service center or your local dealer.

E2204

This error appears when the signal from sensor 2 is not received normally. “LE” will be flashing on the screen. Please proceed as follows to solve the problem.

Processing method is the same as the E1204.

E0204

This error appears when the signals from sensor 1 and sensor 2 are abnormal. “LE” will be flashing on the screen. Please proceed as follows to solve the problem.

Processing method is the same as the E1204.

APPENDIX A: LEVEL HUNTER III Menu List

QUICK SETUP(100)

1st MENU	2nd MENU	Range	Default
SENSOR 1 (110)	UNIT	mm/ cm/ m/ in/ yd/ ft	m
	BOTTOM	0.3 ~ 99.99m	10m
	DEAD ZONE	0.3 ~ 99.99m	0.3m
	4mA OUT	-99.99 ~ 99.99m	0m
	20mA OUT	-99.99 ~ 99.99m	10m
SENSOR 2 (120)	UNIT	mm/ cm/ m/ in/ yd/ ft	m
	BOTTOM	0.3 ~ 99.99m	10m
	DEAD ZONE	0.3 ~ 99.99m	0.3m
	4mA OUT	-99.99 ~ 99.99m	0m
	20mA OUT	-99.99 ~ 99.99m	10m
CURRENT SIMULATION (130)	OUTPUT 1	Measure/ 3.8mA/ 4mA/ 12mA/ 20mA/ 22mA	Measure
	OUTPUT 2	Measure/ 3.8mA/ 4mA/ 12mA/ 20mA/ 22mA	Measure

LEVEL METER SETUP(200) > LEVEL(210)

3rd MENU	4th MENU	Range	Default
SENSOR 1 (211)	USE	ENABLE/DISABLE	ENABLE
	SENSOR TYPE	LXD-10 / LXD-15	LXD-10
	BOTTOM	0.3 ~ 99.99m	10m
	DEAD ZONE	0.3 ~ 99.99m	0.3m
	TX POWER	1~100	50
	RX GAIN	0~100	93
	TYPE	DISTANCE/ LEVEL/ SPACE/ VOLUME	LEVEL
	N.THRESHOLD	1[0.1V], 2[0.3V], 3[0.5V], 4[0.8V], 5[0.9V], 6[1.1V], 7[1.3V], 8[1.6V], 9[1.7V], 10[2.0V]	4[0.8V]
	F.THRES-HOLD	1[0.1V], 2[0.3V], 3[0.5V], 4[0.8V], 5[0.9V], 6[1.1V], 7[1.3V], 8[1.6V], 9[1.7V], 10[2.0V]	4[0.8V]
	TEMP TYPE	INSIDE/ OUTSIDE/ FIX	INSIDE
	TEMP FIX	0~60℃	25℃
	TEMP	0~60℃	
	DAMPING	SLOW/ NORMAL/ FAST/ VERY FAST	NORMAL
	SOUND SPEED	1~9999 m/s	331.5m/s
	SOUND SPEED FACTOR	-2.0~2.0 m/℃	0.60m/℃
	LEVEL OFFSET	-99m~999.9m	0m
SENSOR 2 (212)	same menus as SENSOR 1 above		
UNIT (213)	UNIT	mm/ cm/ m/ in/ yd/ ft	meter
	TEMP UNIT	℃ or ℉	℃

LEVEL METER SETUP(200) > VOLUME(220)

3rd MENU	4th MENU	Range	Default
TYPE (221)	TANK TYPE	HORIZONTAL CYLINDER/ VERTICAL CYLINDER/ SPHERE/ USER DEFINE	VERTICAL CYLINDER
	HEAD TYPE	CONICAL HEAD/ ELLIPSOIDAL HEAD/ GUPPY HEAD/ SPHERICAL HEAD/ FLAT HEAD	FLAT HEAD
	BOTTOM TYPE	CONICAL BOTTOM/ ELLIPSOIDAL BOTTOM/ SPHERICAL BOTTOM/ FLAT BOTTOM	FLAT BOTTOM
VARIABLE (222)	D	0~50M (Tank diameter)	5M
	L	0~15M (Tank width/height)	10M
	A	Head/bottom width(-15M~15M) (+ : convex / - concave)	0.5M
LEVEL TABLE (223)	INDEX1~30	Measured level value by user's tank It has to be matched with the volume table below.	0
VOLUME TABLE (223)	INDEX1~30	Measured volume value by user's tank. It has to be matched with the level table below.	0
SIMULATION (225)	LEVEL	Simulation level input	0
	VOLUME	Volume	0
	MAX VOLUME	Total volume value display by setting tank condition	0

	RATIO	Ratio of Volume and max volume	0

LEVEL METER SETUP(200) > RELAY(230)

3rd MENU	4th MENU	Range	Default
RELAY1 (231)	FUNCTION	NONE/ LIMIT/ ALTERNATE/ ALARM	NONE
	OPERATE	SENSOR 1 / SENSOR 2	SENSOR1
	GROUP	1~3	1
	ON POINT	0~15.5m	0m
	OFF POINT	0~15.5m	0m
RELAY2 (232)	FUNCTION	NONE/ LIMIT/ ALTERNATE/ ALARM	NONE
	OPERATE	SENSOR 1 / SENSOR 2	SENSOR1
	GROUP	1~3	1
	ON POINT	0~15.5m	0m
	OFF POINT	0~15.5m	0m
RELAY3 (233)	FUNCTION	NONE/ LIMIT/ ALTERNATE/ ALARM	NONE
	OPERATE	SENSOR 1 / SENSOR 2	SENSOR1
	GROUP	1~3	1
	ON POINT	0~15.5m	0m
	OFF POINT	0~15.5m	0m
RELAY4 (234)	FUNCTION	NONE/ LIMIT/ ALTERNATE/ ALARM	NONE
	OPERATE	SENSOR 1 / SENSOR 2	SENSOR1
	GROUP	1~3	1
	ON POINT	0~15.5m	0m
	OFF POINT	0~15.5m	0m
RELAY5 (235)	FUNCTION	NONE/ LIMIT/ ALTERNATE/ ALARM	NONE
	OPERATE	SENSOR 1 / SENSOR 2	SENSOR1
	GROUP	1~3	1
	ON POINT	0~15.5m	0m
	OFF POINT	0~15.5m	0m
RELAY6 (236)	FUNCTION	NONE/ LIMIT/ ALTERNATE/ ALARM	NONE
	OPERATE	SENSOR 1 / SENSOR 2	SENSOR1
	GROUP	1~3	1
	ON POINT	0~15.5m	0m
	OFF POINT	0~15.5m	0m
RELAY SIMULATION (237)	RELAY 1	ON/ OFF	OFF
	RELAY 2	ON/ OFF	OFF
	RELAY 3	ON/ OFF	OFF
	RELAY 4	ON/ OFF	OFF
	RELAY 5	ON/ OFF	OFF
	RELAY 6	ON/ OFF	OFF

LEVEL METER SETUP(200) > CURRENT OUTPUT(240)

3rd MENU	4th MENU	Range	Default
CURRENT OUTPUT 1 (241)	4mA	-99.99 ~ 99.99m	0m
	20mA	-99.99 ~ 99.99m	10m
	ERROR	HOLD/ 3.8mA/ 22mA	22mA
CURRENT OUTPUT 2 (242)	4mA	-99.99 ~ 99.99m	0m
	20mA	-99.99 ~ 99.99m	10m
	ERROR	HOLD/ 3.8mA/ 22mA	22mA
CURRENT SIMULATION (243)	OUTPUT 1	MEASURE/ 3.8mA/ 4mA/ 12mA/ 20mA/ 22mA	MEASURE
	OUTPUT 2	MEASURE/ 3.8mA/ 4mA/ 12mA/ 20mA/ 22mA	MEASURE

LEVEL METER SETUP(200) > COMMUNICATION SETUP (250)			
3rd MENU	4th MENU	Range	Default
RS-232 SETUP (251)	USE	ENABLE/ DISABLE	ENABLE
	BAUDRATE	4800, 9600, 14400, 19200, 38400, 57600, 115200	9600
	PARITY	NONE/ ODD/ EVEN	NONE
	STOP BIT	1 or 2	1
	DATA BIT	8 or 9	8
	PROTOCOL	ECHO / BKCM/ Modbus-RTU/ Modbus-ASCII	ECHO
RS-485 SETUP (252)	USE	ENABLE/ DISABLE	DISABLE
	BAUDRATE	4800, 9600, 14400, 19200, 38400, 57600, 115200	9600
	PARITY	NONE/ ODD/ EVEN	NONE
	STOP BIT	1 or 2	1
	DATA BIT	8 or 9	8
	PROTOCOL	ECHO / BKCM/ Modbus-RTU/ Modbus-ASCII	ECHO

LOGGING SETUP (300)			
2nd MENU	3nd MENU	Range	Default
LOGGING PERIOD (310)	LOGGING PERIOD	NONE/ 10 SEC/ 1 MINUTE/ 5 MINUTE/ 10 MINUTE/ 15 MINUTE/ 30 MINUTE/ 60 MINUTE	NONE
LOGGING ERASE (320)			
USB LOGGING (330)			
LOGGING ERASE (320)			

SYSTEM SETUP (400)			
2nd MENU	3nd MENU	Range	Default
SYSTEM INFO (410)	-		
SYSTEM ID (420)	SYSTEM ID	0~99	0
	MODBUS ID	1~247	1
SYSTEM TIME (430)	SYSTEM TIME	2000/00/00/ 00:00 ~ 2099/12/31 23:59	2013/1/1/00:00
PASSWORD (440)	PASSWORD	0~9999	0
LANGUAGE (450)	LANGUAGE	ENGLISH	ENGLISH
FAIL SAFE TIME (460)	-	20~999 sec	300 sec
DISPLAY TYPE (470)	-	TEMP/ CURRENT	TEMP
SETTING BACKUP (480)	-		
RESET (490)	MASTER RESET (491)		
	USER RESET (492)		

NAVIGATION (500)

APPENDIX B. RS-232/RS-485 Protocol

1. ECHO PROTOCOL

Data Field	DATA START						System ID			YEAR			MONTH			DAY			HOUR			MIN.		
Byte Number	1	2	3	4	5	6	7	8	9	10	11	12	13	14	15	16	17	18	19	20	21	22	23	24	25	26
Data	:	D	A	T	A		0	0		2	0	1	3		0	1		0	1		0	0		0	0	

Data Field	SECOND			UNIT		SENSOR1 Level							SENSOR2 Level							SENSOR1-SENSOR2 Level						
Byte Number	27	28	29	30	31	32	33	34	35	36	37	38	39	40	41	42	43	44	45	46	47	48	49	50	51	52
Data	0	0		M		0	0	0	0	0	0		0	0	0	0	0	0		0	0	0	0	0	0	

Data Field	SENSOR1-SENSOR2 Level							SENSOR1 Volume											SENSOR2 Volume							
Byte Number	53	54	55	56	57	58	59	60	61	62	63	64	65	66	67	68	69	70	71	72	73	74	75	76	77	78
Data	0	0	0	0	0	0		0	0	0	0	0	0	0	0	0		0	0	0	0	0	0	0	0	0

Data Field	TEMP. UNIT			SENSOR1 TEMPERATURE								SENSOR2 TEMPERATURE							DATA END	
Byte Number	79	80	81	82	83	84	85	86	87	88	89	90	91	92	93	94	95	96	97	98	99
Data		C		+/-	0	0	0	0	.	0		+/-	0	0	0	0	.	0		₩n	₩r

2. DATA FORMAT

System ID: System ID

YEAR/MONTH/DAY/HOUR/MINUTE/SECOND: DATA LOGGING TIME

UNIT: MEASUREMENT UNIT

UNIT					
mm	cm	m	ft	in	yd

SENSOR1 Level: Measurement value of SENSOR1.

SENSOR2 Level: Measurement value of SENSOR2.

SENSOR1-SENSOR2 Level: Differentiation subtracted SENSOR2 from SENSOR1

SENSOR2-SENSOR1 Level: Differentiation subtracted SENSOR1 from SENSOR2.

SENSOR1 Volume: Measurement value of SENSOR1 Volume.

SENSOR2 Volume: Measurement value of SENSOR2 Volume.

Temp unit: the unit of temperature

Temperature unit	
C	℃
F	℉

SENSOR1 Temperature: Temperature of SENSOR1

SENSOR2 Temperature: Temperature of SENSOR1

DATA END: The sign of DATA end. “\n\r(Line feed(0x12), carriage return(0x15))”

2. BKCM PROTOCOL

“This protocol is designed for a specific company. It isn’t printed in this manual.”

3. Modbus

LEVEL HUNTER III provides Modbus RTU and Modbus ASCII. It is Read Holding Registers only, Modbus ID is available between 1~247. Modbus ID setting menu locates as below.

SYSTEM SETUP->SYSTEM ID->Modbus ID

Type	Description	Start Register		Register Offset		Registers	Data Description
		Hex	Decimal	Hex	Decimal		
ID	Product code	8001	32769	8000	32768	1	0 = Level(LEVEL HUNTER III)
							10 = Flow (Flow Hunter III)
							20 = Sludge
Unit	Measurement Unit (Level)	8002	32770	8001	32769	1	1 = Meter
							2 = Millimeter
							3 = Centimeter
							4 = feet
							5 = inch
							6 = yard
	Temperature Unit	8004	32772	8003	32771	1	0 = ℃
							1 = ℉

Type	Description	Start Register		Register Offset		Registers	Data Description	
		Hex	Decimal	Hex	Decimal			
Data	Distance1	8011	32785	8010	32784	2	SENSOR1 Distance	float
	Level1	8013	32787	8012	32786	2	SENSOR1 level	float
	Space1	8015	32789	8014	32788	2	SENSOR1 space	float
	Volume1	8017	32791	8016	32790	2	SENSOR1 volume	float
	Distance2	8019	32793	8018	32792	2	SENSOR2 Distance	float
	Level2	801B	32795	801A	32794	2	SENSOR2 level	float
Data	Space2	801D	32797	801C	32796	2	SENSOR2 space	float
	Volume2	801F	32799	801E	32798	2	SENSOR2 volume	float
	Temp 1(inside)	802B	32811	802A	32810	2	SENSOR1 temperature	float
	Temp 2(inside)	802D	32813	802C	32812	2	SENSOR2 temperature	float

	Temp (outside)	802F	32815	802E	32814	2	Outside temperature	float
Relay	Relay control status	8031	32817	8030	32816	1	Bit Mapped	
							0bxxxx xxx0 / (0x00)	Relay 1 Off
							0bxxxx xxx1 / (0x01)	Relay 1 On
							0bxxxx xx0x / (0x00)	Relay 2 Off
							0bxxxx xx1x / (0x02)	Relay 2 On
							0bxxxx x0xx / (0x00)	Relay 3 Off
							0bxxxx x1xx / (0x04)	Relay 3 On
							0bxxxx 0xxx / (0x00)	Relay 4 Off
							0bxxxx 1xxx / (0x08)	Relay 4 On
							0bxxx0 xxxx / (0x00)	Relay 5 Off
							0bxxx1 xxxx / (0x10)	Relay 5 On
							0bxx0x xxxx / (0x00)	Relay 6 Off
							0bxx1x xxxx / (0x20)	Relay 6 On

Request PDU Example

Product code Request

Function Code	Data Request	
	Register Offset	Quantity
0 X 03	0 X 8000	0 X 0001

Distance, Level, Space, Volume Request

Function Code	Data Request	
	Register Offset	Quantity
0 X 03	0 X 8000	0 X 0002
0 X 03	0 X 8012	0 X 0002
0 X 03	0 X 8014	0 X 0002
0 X 03	0 X 8016	0 X 0002

Modbus Register Data type

Data field: 4byte float type

ID, UNIT, Relay field: Unsigned short (2byte) type

APPENDIX C
Volume Table

APPENDIX C. Volume Table

VERTICAL CYLINDER - CONICAL BOTTOM

D[m]		1	1	1	3	3	3	5	5	5	7	7	7	9	9	9
A[m]		0.5	1.0	2.0	0.5	1.0	2.0	0.5	1.0	2.0	0.5	1.0	2.0	0.5	1.0	2.0
h[m]	0.5	0.13	0.03	0.01	1.18	0.29	0.07	3.27	0.82	0.20	6.41	1.60	0.40	10.60	2.65	0.66
	1.0	0.52	0.26	0.07	4.71	2.36	0.59	13.09	6.54	1.64	25.66	12.83	3.21	42.41	21.21	5.30
	1.5	0.92	0.65	0.22	8.25	5.89	1.99	22.91	16.36	5.52	44.90	32.07	10.82	74.22	53.01	17.89
	2.0	1.31	1.05	0.52	11.78	9.42	4.71	32.72	26.18	13.09	64.14	51.31	25.66	106.03	84.82	42.41
	2.5	1.70	1.44	0.92	15.32	12.96	8.25	42.54	36.00	22.91	83.38	70.55	44.90	137.84	116.63	74.22
	3.0	2.09	1.83	1.31	18.85	16.49	11.78	52.36	45.81	32.72	102.63	89.80	64.14	169.65	148.44	106.03
	3.5	2.49	2.23	1.70	22.38	20.03	15.32	62.18	55.63	42.54	121.87	109.04	83.38	201.45	180.25	137.84
	4.0	2.88	2.62	2.09	25.92	23.56	18.85	71.99	65.45	52.36	141.11	128.28	102.63	233.26	212.06	169.65
	4.5	3.27	3.01	2.49	29.45	27.10	22.38	81.81	75.27	62.18	160.35	147.52	121.87	265.07	243.87	201.45
	5.0	3.67	3.40	2.88	32.99	30.63	25.92	91.63	85.08	71.99	179.59	166.77	141.11	296.88	275.67	233.26
	5.5	4.06	3.80	3.27	36.52	34.16	29.45	101.45	94.90	81.81	198.84	186.01	160.35	328.69	307.48	265.07
	6.0	4.45	4.19	3.67	40.06	37.70	32.99	111.26	104.72	91.63	218.08	205.25	179.59	360.50	339.29	296.88
	6.5	4.84	4.58	4.06	43.59	41.23	36.52	121.08	114.54	101.45	237.32	224.49	198.84	392.31	371.10	328.69
	7.0	5.24	4.97	4.45	47.12	44.77	40.06	130.90	124.35	111.26	256.56	243.74	218.08	424.12	402.91	360.50
	7.5	5.63	5.37	4.84	50.66	48.30	43.59	140.72	134.17	121.08	275.81	262.98	237.32	455.92	434.72	392.31
	8.0	6.02	5.76	5.24	54.19	51.84	47.12	150.53	143.99	130.90	295.05	282.22	256.56	487.73	466.53	424.12
	8.5	6.41	6.15	5.63	57.73	55.37	50.66	160.35	153.81	140.72	314.29	301.46	275.81	519.54	498.34	455.92
	9.0	6.81	6.54	6.02	61.26	58.90	54.19	170.17	163.62	150.53	333.53	320.70	295.05	551.35	530.14	487.73
	9.5	7.20	6.94	6.41	64.80	62.44	57.73	179.99	173.44	160.35	352.77	339.95	314.29	583.16	561.95	519.54
	10.0	7.59	7.33	6.81	68.33	65.97	61.26	189.80	183.26	170.17	372.02	359.19	333.53	614.97	593.76	551.35
	10.5	7.98	7.72	7.20	71.86	69.51	64.80	199.62	193.08	179.99	391.26	378.43	352.77	646.78	625.57	583.16

D: Tank diameter

A: Bottom length

h: Level height

unit: m3

VERTICAL CYLINDER - CONICAL BOTTOM

D[m]		1	1	1	3	3	3	5	5	5	7	7	7	9	9	9
A[m]		0.5	1.0	2.0	0.5	1.0	2.0	0.5	1.0	2.0	0.5	1.0	2.0	0.5	1.0	2.0
h[m]	11.0	8.38	8.12	7.59	75.40	73.04	68.33	209.44	202.89	189.80	410.50	397.67	372.02	678.58	657.38	614.97
	11.5	8.77	8.51	7.98	78.93	76.58	71.86	219.26	212.71	199.62	429.74	416.92	391.26	710.39	689.19	646.78
	12.0	9.16	8.90	8.38	82.47	80.11	75.40	229.07	222.53	209.44	448.99	436.16	410.50	742.20	721.00	678.58
	12.5	9.56	9.29	8.77	86.00	83.64	78.93	238.89	232.35	219.26	468.23	455.40	429.74	774.01	752.80	710.39
	13.0	9.95	9.69	9.16	89.54	87.18	82.47	248.71	242.16	229.07	487.47	474.64	448.99	805.82	784.61	742.20
	13.5	10.34	10.08	9.56	93.07	90.71	86.00	258.53	251.98	238.89	506.71	493.88	468.23	837.63	816.42	774.01
	14.0	10.73	10.47	9.95	96.60	94.25	89.54	268.34	261.80	248.71	525.95	513.13	487.47	869.44	848.23	805.82
	14.5	11.13	10.86	10.34	100.14	97.78	93.07	278.16	271.62	258.53	545.20	532.37	506.71	901.24	880.04	837.63
	15.0	11.52	11.26	10.73	103.67	101.32	96.60	287.98	281.43	268.34	564.44	551.61	525.95	933.05	911.85	869.44

D: Tank diameter

A: Bottom length

h: Level height

unit: m3

VERTICAL CYLINDER - ELLIPSOIDAL BOTTOM

D[m]		1	1	1	3	3	3	5	5	5	7	7	7	9	9	9
A[m]		0.5	1.0	2.0	0.5	1.0	2.0	0.5	1.0	2.0	0.5	1.0	2.0	0.5	1.0	2.0
h[m]	0.5	0.26	0.16	0.09	2.36	1.47	0.81	6.54	4.09	2.25	12.83	8.02	4.41	21.21	13.25	7.29
	1.0	0.65	0.52	0.33	5.89	4.71	2.95	16.36	13.09	8.18	32.07	25.66	16.04	53.01	42.41	26.51
	1.5	1.05	0.92	0.66	9.42	8.25	5.96	26.18	22.91	16.57	51.31	44.90	32.47	84.82	74.22	53.68
	2.0	1.44	1.31	1.05	12.96	11.78	9.42	36.00	32.72	26.18	70.55	64.14	51.31	116.63	106.03	84.82
	2.5	1.83	1.70	1.44	16.49	15.32	12.96	45.81	42.54	36.00	89.80	83.38	70.55	148.44	137.84	116.63
	3.0	2.23	2.09	1.83	20.03	18.85	16.49	55.63	52.36	45.81	109.04	102.63	89.80	180.25	169.65	148.44
	3.5	2.62	2.49	2.23	23.56	22.38	20.03	65.45	62.18	55.63	128.28	121.87	109.04	212.06	201.45	180.25
	4.0	3.01	2.88	2.62	27.10	25.92	23.56	75.27	71.99	65.45	147.52	141.11	128.28	243.87	233.26	212.06
	4.5	3.40	3.27	3.01	30.63	29.45	27.10	85.08	81.81	75.27	166.77	160.35	147.52	275.67	265.07	243.87
	5.0	3.80	3.67	3.40	34.16	32.99	30.63	94.90	91.63	85.08	186.01	179.59	166.77	307.48	296.88	275.67
	5.5	4.19	4.06	3.80	37.70	36.52	34.16	104.72	101.45	94.90	205.25	198.84	186.01	339.29	328.69	307.48
	6.0	4.58	4.45	4.19	41.23	40.06	37.70	114.54	111.26	104.72	224.49	218.08	205.25	371.10	360.50	339.29
	6.5	4.97	4.84	4.58	44.77	43.59	41.23	124.35	121.08	114.54	243.74	237.32	224.49	402.91	392.31	371.10
	7.0	5.37	5.24	4.97	48.30	47.12	44.77	134.17	130.90	124.35	262.98	256.56	243.74	434.72	424.12	402.91
	7.5	5.76	5.63	5.37	51.84	50.66	48.30	143.99	140.72	134.17	282.22	275.81	262.98	466.53	455.92	434.72
	8.0	6.15	6.02	5.76	55.37	54.19	51.84	153.81	150.53	143.99	301.46	295.05	282.22	498.34	487.73	466.53
	8.5	6.54	6.41	6.15	58.90	57.73	55.37	163.62	160.35	153.81	320.70	314.29	301.46	530.14	519.54	498.34
	9.0	6.94	6.81	6.54	62.44	61.26	58.90	173.44	170.17	163.62	339.95	333.53	320.70	561.95	551.35	530.14
	9.5	7.33	7.20	6.94	65.97	64.80	62.44	183.26	179.99	173.44	359.19	352.77	339.95	593.76	583.16	561.95
	10.0	7.72	7.59	7.33	69.51	68.33	65.97	193.08	189.80	183.26	378.43	372.02	359.19	625.57	614.97	593.76
	10.5	8.12	7.98	7.72	73.04	71.86	69.51	202.89	199.62	193.08	397.67	391.26	378.43	657.38	646.78	625.57
	11.0	8.51	8.38	8.12	76.58	75.40	73.04	212.71	209.44	202.89	416.92	410.50	397.67	689.19	678.58	657.38
	11.5	8.90	8.77	8.51	80.11	78.93	76.58	222.53	219.26	212.71	436.16	429.74	416.92	721.00	710.39	689.19
	12.0	9.29	9.16	8.90	83.64	82.47	80.11	232.35	229.07	222.53	455.40	448.99	436.16	752.80	742.20	721.00
	12.5	9.69	9.56	9.29	87.18	86.00	83.64	242.16	238.89	232.35	474.64	468.23	455.40	784.61	774.01	752.80

D: Tank diameter

A: Bottom length

h: Level height

unit: m3

VERTICAL CYLINDER - ELLIPSOIDAL BOTTOM

D[m]		1	1	1	3	3	3	5	5	5	7	7	7	9	9	9
A[m]		0.5	1.0	2.0	0.5	1.0	2.0	0.5	1.0	2.0	0.5	1.0	2.0	0.5	1.0	2.0
h[m]	13.0	10.08	9.95	9.69	90.71	89.54	87.18	251.98	248.71	242.16	493.88	487.47	474.64	816.42	805.82	784.61
	13.5	10.47	10.34	10.08	94.25	93.07	90.71	261.80	258.53	251.98	513.13	506.71	493.88	848.23	837.63	816.42
	14.0	10.86	10.73	10.47	97.78	96.60	94.25	271.62	268.34	261.80	532.37	525.95	513.13	880.04	869.44	848.23
	14.5	11.26	11.13	10.86	101.32	100.14	97.78	281.43	278.16	271.62	551.61	545.20	532.37	911.85	901.24	880.04
	15.0	11.65	11.52	11.26	104.85	103.67	101.32	291.25	287.98	281.43	570.85	564.44	551.61	943.66	933.05	911.85

VERTICAL CYLINDER - SPHERICAL BOTTOM

D[m]		1	1	1	3	3	3	5	5	5	7	7	7	9	9	9
A[m]		0.5	1.0	2.0	0.5	1.0	2.0	0.5	1.0	2.0	0.5	1.0	2.0	0.5	1.0	2.0
h[m]	0.5	0.26	0.36	0.70	1.83	1.15	1.10	4.97	2.72	1.88	9.69	5.07	3.06	15.97	8.21	4.63
	1.0	0.65	0.92	2.29	5.37	4.06	3.86	14.79	10.34	7.00	28.93	19.77	11.72	47.78	32.33	18.00
	1.5	1.05	1.31	3.98	8.90	7.59	7.51	24.61	20.16	14.58	48.17	39.01	25.18	79.59	64.14	39.32
	2.0	1.44	1.70	4.97	12.44	11.13	11.26	34.43	29.98	23.82	67.41	58.25	42.67	111.40	95.95	67.81
	2.5	1.83	2.09	5.37	15.97	14.66	14.79	44.24	39.79	33.64	86.66	77.49	61.92	143.20	127.76	99.61
	3.0	2.23	2.49	5.76	19.50	18.20	18.33	54.06	49.61	43.46	105.90	96.73	81.16	175.01	159.57	131.42
	3.5	2.62	2.88	6.15	23.04	21.73	21.86	63.88	59.43	53.28	125.14	115.98	100.40	206.82	191.38	163.23
	4.0	3.01	3.27	6.54	26.57	25.26	25.39	73.70	69.25	63.09	144.38	135.22	119.64	238.63	223.18	195.04
	4.5	3.40	3.67	6.94	30.11	28.80	28.93	83.51	79.06	72.91	163.62	154.46	138.88	270.44	254.99	226.85
	5.0	3.80	4.06	7.33	33.64	32.33	32.46	93.33	88.88	82.73	182.87	173.70	158.13	302.25	286.80	258.66
	5.5	4.19	4.45	7.72	37.18	35.87	36.00	103.15	98.70	92.55	202.11	192.95	177.37	334.06	318.61	290.47
	6.0	4.58	4.84	8.12	40.71	39.40	39.53	112.97	108.52	102.36	221.35	212.19	196.61	365.86	350.42	322.28
	6.5	4.97	5.24	8.51	44.24	42.94	43.07	122.78	118.33	112.18	240.59	231.43	215.85	397.67	382.23	354.08
	7.0	5.37	5.63	8.90	47.78	46.47	46.60	132.60	128.15	122.00	259.84	250.67	235.10	429.48	414.04	385.89
	7.5	5.76	6.02	9.29	51.31	50.00	50.13	142.42	137.97	131.82	279.08	269.92	254.34	461.29	445.84	417.70
	8.0	6.15	6.41	9.69	54.85	53.54	53.67	152.24	147.79	141.63	298.32	289.16	273.58	493.10	477.65	449.51
	8.5	6.54	6.81	10.08	58.38	57.07	57.20	162.05	157.60	151.45	317.56	308.40	292.82	524.91	509.46	481.32
	9.0	6.94	7.20	10.47	61.92	60.61	60.74	171.87	167.42	161.27	336.80	327.64	312.06	556.72	541.27	513.13
	9.5	7.33	7.59	10.86	65.45	64.14	64.27	181.69	177.24	171.09	356.05	346.88	331.31	588.53	573.08	544.94
	10.0	7.72	7.98	11.26	68.98	67.68	67.81	191.51	187.06	180.90	375.29	366.13	350.55	620.33	604.89	576.74
	10.5	8.12	8.38	11.65	72.52	71.21	71.34	201.32	196.87	190.72	394.53	385.37	369.79	652.14	636.70	608.55
	11.0	8.51	8.77	12.04	76.05	74.74	74.87	211.14	206.69	200.54	413.77	404.61	389.03	683.95	668.50	640.36
	11.5	8.90	9.16	12.44	79.59	78.28	78.41	220.96	216.51	210.36	433.02	423.85	408.28	715.76	700.31	672.17
	12.0	9.29	9.56	12.83	83.12	81.81	81.94	230.78	226.33	220.17	452.26	443.10	427.52	747.57	732.12	703.98
	12.5	9.69	9.95	13.22	86.66	85.35	85.48	240.59	236.14	229.99	471.50	462.34	446.76	779.38	763.93	735.79

VERTICAL CYLINDER - SPHERICAL BOTTOM

D[m]		1	1	1	3	3	3	5	5	5	7	7	7	9	9	9
A[m]		0.5	1.0	2.0	0.5	1.0	2.0	0.5	1.0	2.0	0.5	1.0	2.0	0.5	1.0	2.0
h[m]	13.0	10.08	10.34	13.61	90.19	88.88	89.01	250.41	245.96	239.81	490.74	481.58	466.00	811.19	795.74	767.60
	13.5	10.47	10.73	14.01	93.72	92.42	92.55	260.23	255.78	249.63	509.99	500.82	485.25	842.99	827.55	799.40
	14.0	10.86	11.13	14.40	97.26	95.95	96.08	270.05	265.60	259.44	529.23	520.06	504.49	874.80	859.36	831.21
	14.5	11.26	11.52	14.79	100.79	99.48	99.61	279.86	275.41	269.26	548.47	539.31	523.73	906.61	891.17	863.02
	15.0	11.65	11.91	15.18	104.33	103.02	103.15	289.68	285.23	279.08	567.71	558.55	542.97	938.42	922.97	894.83

D: Tank diameter

A: Bottom length

h: Level height

unit: m^3

VERTICAL CYLINDER - FLAT BOTTOM

D[m]		1	1	1	3	3	3	5	5	5	7	7	7	9	9	9
h[m]	0.5	0.39	0.39	0.39	3.53	3.53	3.53	9.82	9.82	9.82	19.24	19.24	19.24	31.81	31.81	31.81
	1.0	0.79	0.79	0.79	7.07	7.07	7.07	19.63	19.63	19.63	38.48	38.48	38.48	63.62	63.62	63.62
	1.5	1.18	1.18	1.18	10.60	10.60	10.60	29.45	29.45	29.45	57.73	57.73	57.73	95.43	95.43	95.43
	2.0	1.57	1.57	1.57	14.14	14.14	14.14	39.27	39.27	39.27	76.97	76.97	76.97	127.23	127.23	127.23
	2.5	1.96	1.96	1.96	17.67	17.67	17.67	49.09	49.09	49.09	96.21	96.21	96.21	159.04	159.04	159.04
	3.0	2.36	2.36	2.36	21.21	21.21	21.21	58.90	58.90	58.90	115.45	115.45	115.45	190.85	190.85	190.85
	3.5	2.75	2.75	2.75	24.74	24.74	24.74	68.72	68.72	68.72	134.70	134.70	134.70	222.66	222.66	222.66
	4.0	3.14	3.14	3.14	28.27	28.27	28.27	78.54	78.54	78.54	153.94	153.94	153.94	254.47	254.47	254.47
	4.5	3.53	3.53	3.53	31.81	31.81	31.81	88.36	88.36	88.36	173.18	173.18	173.18	286.28	286.28	286.28
	5.0	3.93	3.93	3.93	35.34	35.34	35.34	98.17	98.17	98.17	192.42	192.42	192.42	318.09	318.09	318.09
	5.5	4.32	4.32	4.32	38.88	38.88	38.88	107.99	107.99	107.99	211.66	211.66	211.66	349.89	349.89	349.89
	6.0	4.71	4.71	4.71	42.41	42.41	42.41	117.81	117.81	117.81	230.91	230.91	230.91	381.70	381.70	381.70
	6.5	5.11	5.11	5.11	45.95	45.95	45.95	127.63	127.63	127.63	250.15	250.15	250.15	413.51	413.51	413.51
	7.0	5.50	5.50	5.50	49.48	49.48	49.48	137.44	137.44	137.44	269.39	269.39	269.39	445.32	445.32	445.32
	7.5	5.89	5.89	5.89	53.01	53.01	53.01	147.26	147.26	147.26	288.63	288.63	288.63	477.13	477.13	477.13
	8.0	6.28	6.28	6.28	56.55	56.55	56.55	157.08	157.08	157.08	307.88	307.88	307.88	508.94	508.94	508.94

	8.5	6.68	6.68	6.68	60.08	60.08	60.08	166.90	166.90	166.90	327.12	327.12	327.12	540.75	540.75	540.75
	9.0	7.07	7.07	7.07	63.62	63.62	63.62	176.71	176.71	176.71	346.36	346.36	346.36	572.56	572.56	572.56
	9.5	7.46	7.46	7.46	67.15	67.15	67.15	186.53	186.53	186.53	365.60	365.60	365.60	604.36	604.36	604.36
	10.0	7.85	7.85	7.85	70.69	70.69	70.69	196.35	196.35	196.35	384.85	384.85	384.85	636.17	636.17	636.17
	10.5	8.25	8.25	8.25	74.22	74.22	74.22	206.17	206.17	206.17	404.09	404.09	404.09	667.98	667.98	667.98
	11.0	8.64	8.64	8.64	77.75	77.75	77.75	215.98	215.98	215.98	423.33	423.33	423.33	699.79	699.79	699.79
	11.5	9.03	9.03	9.03	81.29	81.29	81.29	225.80	225.80	225.80	442.57	442.57	442.57	731.60	731.60	731.60
	12.0	9.42	9.42	9.42	84.82	84.82	84.82	235.62	235.62	235.62	461.81	461.81	461.81	763.41	763.41	763.41
	12.5	9.82	9.82	9.82	88.36	88.36	88.36	245.44	245.44	245.44	481.06	481.06	481.06	795.22	795.22	795.22
	13.0	10.21	10.21	10.21	91.89	91.89	91.89	255.25	255.25	255.25	500.30	500.30	500.30	827.02	827.02	827.02

VERTICAL CYLINDER - FLAT BOTTOM

D[m]		1	1	1	3	3	3	5	5	5	7	7	7	9	9	9
h[m]	13.5	10.60	10.60	10.60	95.43	95.43	95.43	265.07	265.07	265.07	519.54	519.54	519.54	858.83	858.83	858.83
	14.0	11.00	11.00	11.00	98.96	98.96	98.96	274.89	274.89	274.89	538.78	538.78	538.78	890.64	890.64	890.64
	14.5	11.39	11.39	11.39	102.49	102.49	102.49	284.71	284.71	284.71	558.03	558.03	558.03	922.45	922.45	922.45
	15.0	11.78	11.78	11.78	106.03	106.03	106.03	294.52	294.52	294.52	577.27	577.27	577.27	954.26	954.26	954.26

D: Tank diameter

A: Bottom length

h: Level height

unit: m^3

HORIZONTAL CYLINDER - CONICAL HEAD

D[m]		1	1	1	3	3	3	5	5	5	7	7	7	9	9	9
A[m]		0.5	1.0	2.0	0.5	1.0	2.0	0.5	1.0	2.0	0.5	1.0	2.0	0.5	1.0	2.0
h[m]	0.5	2.09	2.23	2.49	3.97	4.07	4.27	5.19	5.27	5.43	6.17	6.24	6.38	7.01	7.07	7.20
	1.0	4.19	4.45	4.97	10.81	11.31	12.32	14.40	14.83	15.68	17.24	17.61	18.35	19.65	19.99	20.66
	1.5				18.85	20.03	22.38	25.87	26.96	29.16	31.22	32.20	34.17	35.74	36.63	38.42
	2.0				26.89	28.74	32.45	38.75	40.82	44.97	47.29	49.21	53.06	54.40	56.18	59.72
	2.5				33.73	35.98	40.50	52.36	55.63	62.18	64.87	68.05	74.41	75.08	78.06	84.02
	3.0				37.70	40.06	44.77	65.97	70.44	79.38	83.48	88.18	97.59	97.32	101.83	110.84
	3.5							78.85	84.30	95.20	102.63	109.04	121.87	120.74	127.07	139.72
	4.0							90.32	96.43	108.67	121.77	129.90	146.14	144.98	153.36	170.14
	4.5							99.53	106.00	118.93	140.38	150.03	169.33	169.65	180.25	201.45
	5.0							104.72	111.26	124.35	157.96	168.87	190.68	194.32	207.13	232.77
	5.5										174.03	185.88	209.57	218.55	233.43	263.18
	6.0										188.02	200.47	225.38	241.97	258.67	292.07
	6.5										199.08	211.84	237.36	264.21	282.44	318.89
	7.0										205.25	218.08	243.74	284.89	304.32	343.19
	7.5													303.55	323.86	364.49
	8.0													319.64	340.51	382.25
	8.5													332.28	353.42	395.71

D: Tank diameter

A: Bottom length

h: Level height

unit: m^3

HORIZONTAL CYLINDER - ELLIPSOIDAL HEAD

D[m]		1	1	1	3	3	3	5	5	5	7	7	7	9	9	9
A[m]		0.5	1.0	2.0	0.5	1.0	2.0	0.5	1.0	2.0	0.5	1.0	2.0	0.5	1.0	2.0
h[m]	0.5	2.23	2.49	3.01	4.22	4.57	5.27	5.48	5.84	6.58	6.47	6.85	7.60	7.33	7.71	8.46
	1.0	4.45	4.97	6.02	11.53	12.76	15.20	15.34	16.70	19.42	18.28	19.70	22.55	20.77	22.23	25.14
	1.5				20.03	22.38	27.10	27.60	30.43	36.08	33.26	36.29	42.35	37.99	41.13	47.41
	2.0				28.52	32.01	38.99	41.28	45.89	55.10	50.45	55.54	65.71	57.99	63.34	74.04
	2.5				35.83	40.20	48.92	55.63	62.18	75.27	69.17	76.65	91.61	80.10	88.10	104.10
	3.0				40.06	44.77	54.19	69.99	78.47	95.43	88.87	98.97	119.16	103.81	114.81	136.80
	3.5							83.67	93.93	114.45	109.04	121.87	147.52	128.67	142.92	171.43
	4.0							95.93	107.65	131.11	129.21	144.77	175.89	154.28	171.96	207.33
	4.5							105.79	118.51	143.96	148.91	167.08	203.43	180.25	201.45	243.87
	5.0							111.26	124.35	150.53	167.63	188.20	229.34	206.22	230.95	280.40
	5.5										184.82	207.44	252.70	231.83	259.99	316.30
	6.0										199.80	224.03	272.50	256.69	288.10	350.94
	6.5										211.60	236.89	287.45	280.40	314.81	383.63
	7.0										218.08	243.74	295.05	302.51	339.57	413.69
	7.5													322.51	361.78	440.32
	8.0													339.72	380.68	462.59
	8.5													353.17	395.20	479.27
	9.0													360.50	402.91	487.73

HORIZONTAL CYLINDER - GUPPY HEAD

D[m]		1	1	1	3	3	3	5	5	5	7	7	7	9	9	9
A[m]		0.5	1.0	2.0	0.5	1.0	2.0	0.5	1.0	2.0	0.5	1.0	2.0	0.5	1.0	2.0
h[m]	0.5	2.04	2.11	2.26	3.92	3.97	4.08	5.15	5.19	5.27	6.14	6.17	6.24	6.98	7.01	7.08
	1.0	4.19	4.45	4.97	10.58	10.85	11.39	14.20	14.42	14.86	17.05	17.24	17.63	19.49	19.66	20.00
	1.5				18.35	19.03	20.38	25.35	25.94	27.10	30.74	31.26	32.28	35.31	35.77	36.69
	2.0				26.28	27.53	30.03	37.81	38.95	41.22	46.38	47.40	49.43	53.56	54.48	56.32
	2.5				33.36	35.25	39.04	50.97	52.85	56.62	63.41	65.13	68.56	73.67	75.24	78.39
	3.0				37.70	40.06	44.77	64.30	67.09	72.68	81.38	84.00	89.22	95.23	97.65	102.48
	3.5							77.23	81.05	88.70	99.90	103.60	110.98	117.87	121.33	128.24
	4.0							89.10	94.00	103.80	118.59	123.53	133.40	141.28	145.97	155.35
	4.5							98.97	104.87	116.68	137.05	143.37	156.01	165.15	171.25	183.45
	5.0							104.72	111.26	124.35	154.85	162.65	178.24	189.18	196.86	212.23
	5.5										171.50	180.81	199.42	213.08	222.48	241.30
	6.0										186.33	197.10	218.64	236.52	247.77	270.26
	6.5										198.37	210.42	234.52	259.15	272.31	298.64
	7.0										205.25	218.08	243.74	280.56	295.67	325.89
	7.5													300.26	317.28	351.32
	8.0													317.57	336.37	373.97
	8.5													331.44	351.75	392.37
	9.0													339.29	360.50	402.91

HORIZONTAL CYLINDER - SPHERICAL HEAD

D[m]		1	1	1	3	3	3	5	5	5	7	7	7	9	9	9
A[m]		0.2	0.3	0.5	0.5	1.0	1.5	1.0	2.0	2.5	1.0	3.5	5.0	1.0	3.0	4.5
h[m]	0.5	3.62	3.67	3.80	7.16	7.46	8.02	9.54	10.25	11.03	11.26	12.64	12.02	13.45	13.74	17.01
	1.0	7.23	7.33	7.59	19.43	20.55	22.23	26.83	29.63	31.97	31.81	37.42	35.18	38.03	39.54	51.45
	1.5				33.64	35.87	38.88	48.55	54.40	58.73	58.06	70.27	65.74	69.72	73.52	98.30
	2.0				47.86	51.18	55.53	72.97	82.49	89.05	88.42	109.06	101.77	106.86	114.03	155.10
	2.5				60.12	64.28	69.74	98.70	112.18	121.08	121.70	152.09	141.73	148.35	159.89	220.00
	3.0				67.28	71.73	77.75	124.42	141.87	153.12	156.86	197.89	184.25	193.33	210.07	291.45
	3.5							148.84	169.96	183.44	192.95	245.04	228.02	240.99	263.66	368.01
	4.0							170.56	194.74	210.20	229.03	292.20	271.80	290.65	319.77	448.34
	4.5							187.86	214.11	231.13	264.19	338.00	314.32	341.61	377.55	531.16
	5.0							197.40	224.36	242.16	297.47	381.03	354.28	393.22	436.16	615.23
	5.5										327.83	419.82	390.31	444.83	494.77	699.29
	6.0										354.08	452.67	420.87	495.80	552.55	782.12
	6.5										374.63	477.45	444.03	545.45	608.66	862.45
	7.0										385.89	490.09		593.12	662.25	939.01
	7.5													638.09	712.43	1010.45
	8.0													679.59	758.28	1075.36
	8.5													716.73	798.80	1132.16
	9.0													748.41	832.78	1179.01
	9.5													773.00	858.58	1213.45
	10.0													786.45	872.32	1230.46

HORIZONTAL CYLINDER - FLAT HEAD

D[m]		1	2	3	4	5	6	7	8	9	10	11	12	13	14	15
h[m]	0.5	0.39	0.61	0.77	0.91	1.02	1.13	1.22	1.31	1.39	1.47	1.54	1.61	1.68	1.74	1.81
	1.0	0.79	1.57	2.06	2.46	2.80	3.10	3.37	3.63	3.86	4.09	4.30	4.50	4.69	4.88	5.06
	1.5		2.53	3.53	4.30	4.95	5.53	6.05	6.52	6.97	7.39	7.78	8.16	8.52	8.86	9.20
	2.0		3.14	5.01	6.28	7.33	8.25	9.07	9.83	10.53	11.18	11.80	12.39	12.95	13.49	14.01
	2.5			6.29	8.26	9.82	11.15	12.34	13.42	14.42	15.35	16.24	17.07	17.87	18.63	19.36
	3.0			7.07	10.11	12.30	14.14	15.75	17.22	18.56	19.82	21.00	22.11	23.17	24.19	25.16
	3.5				11.66	14.68	17.12	19.24	21.14	22.88	24.50	26.01	27.44	28.80	30.10	31.34
	4.0				12.57	16.84	20.02	22.73	25.13	27.32	29.34	31.22	33.00	34.69	36.29	37.83
	4.5					18.61	22.75	26.15	29.12	31.81	34.28	36.58	38.74	40.78	42.73	44.59
	5.0					19.63	25.18	29.41	33.05	36.30	39.27	42.02	44.60	47.04	49.35	51.56
	5.5						27.15	32.44	36.85	40.73	44.26	47.52	50.56	53.42	56.13	58.72
	6.0						28.27	35.11	40.44	45.05	49.20	53.01	56.55	59.87	63.02	66.01
	6.5							37.26	43.74	49.20	54.04	58.46	62.54	66.37	69.97	73.40
	7.0							38.48	46.64	53.09	58.72	63.81	68.49	72.86	76.97	80.86
	7.5								48.96	56.65	63.19	69.02	74.36	79.31	83.96	88.36
	8.0								50.27	59.75	67.36	74.04	80.10	85.69	90.92	95.85
	8.5									62.23	71.15	78.80	85.66	91.95	97.81	103.31
	9.0									63.62	74.45	83.23	90.99	98.05	104.58	110.71
	9.5										77.07	87.25	96.03	103.93	111.21	118.00
	10.0										78.54	90.73	100.71	109.56	117.65	125.15
	10.5											93.49	104.94	114.87	123.84	132.13
	11.0											95.03	108.60	119.78	129.75	138.88
	11.5												111.48	124.21	135.31	145.38
	12.0												113.10	128.04	140.45	151.55
	12.5													131.05	145.07	157.36

HORIZONTAL CYLINDER - FLAT HEAD

D[m]		1	2	3	4	5	6	7	8	9	10	11	12	13	14	15
h[m]	13.0													132.73	149.06	162.71
	13.5														152.19	167.52
	14.0														153.94	171.66
	14.5															174.91
	15.0															176.71

VERTICAL CYLINDER - SPHERICAL BOTTOM

D[m]		1	3	5	7	9	11	13	15	17	19	21	23	25	27	29
h[m]	0.5	0.26	1.05	1.83	2.62	3.40	4.19	4.97	5.76	6.54	7.33	8.12	8.90	9.69	10.47	11.65
	1.0		3.67	6.81	9.95	13.09	16.23	19.37	22.51	25.66	28.80	31.94	35.08	38.22	41.36	46.08
	1.5		7.07	14.14	21.21	28.27	35.34	42.41	49.48	56.55	63.62	70.69	77.75	84.82	91.89	102.49
	2.0			23.04	35.60	48.17	60.74	73.30	85.87	98.44	111.00	123.57	136.14	148.70	161.27	180.12
	2.5			32.72	52.36	71.99	91.63	111.26	130.90	150.53	170.17	189.80	209.44	229.07	248.71	278.16
	3.0				70.69	98.96	127.23	155.51	183.78	212.06	240.33	268.61	296.88	325.15	353.43	395.84
	3.5				89.80	128.28	166.77	205.25	243.74	282.22	320.70	359.19	397.67	436.16	474.64	532.37
	4.0					159.17	209.44	259.70	309.97	360.24	410.50	460.77	511.03	561.30	611.56	686.96
	4.5					190.85	254.47	318.09	381.70	445.32	508.94	572.56	636.17	699.79	763.41	858.83
	5.0						301.07	379.61	458.15	536.69	615.23	693.77	772.31	850.85	929.39	1047.20
	5.5						348.45	443.49	538.52	633.55	728.59	823.62	918.65	1013.69	1108.72	1251.27
	6.0							508.94	622.04	735.13	848.23	961.33	1074.42	1187.52	1300.62	1470.27
	6.5							575.17	707.91	840.64	973.37	1106.10	1238.83	1371.57	1504.30	1703.40
	7.0								795.35	949.28	1103.22	1257.16	1411.10	1565.04	1718.97	1949.88
	7.5								883.57	1060.29	1237.00	1413.72	1590.43	1767.15	1943.86	2208.93
	8.0									1172.86	1373.92	1574.99	1776.05	1977.11	2178.17	2479.76
	8.5									1286.22	1513.20	1740.18	1967.16	2194.14	2421.12	2761.59
	9.0										1654.05	1908.52	2162.99	2417.46	2671.92	3053.63

	9.5										1795.68	2079.21	2362.74	2646.27	2929.80	3355.09
	10.0											2251.47	2565.63	2879.79	3193.95	3665.19
	10.5											2424.52	2770.88	3117.25	3463.61	3983.15

VERTICAL CYLINDER - SPHERICAL BOTTOM

D[m]		1	3	5	7	9	11	13	15	17	19	21	23	25	27	29
h[m]	11.0												2977.71	3357.84	3737.97	4308.17
	11.5												3185.31	3600.79	4016.26	4639.48
	12.0													3845.31	4297.70	4976.28
	12.5													4090.62	4581.49	5317.80
	13.0														4866.85	5663.24
	13.5														5153.00	6011.83
	14.0															6362.77
	14.5															6715.29
	15.0															7068.58

ECHO Process Instrumentation, Inc.
Mail to: PO Box 800, Shalimar, FL 32579
Ship to: 70 6th Ave, Shalimar, FL 32579
Phone: 850.609.1300 Fax: 850.651.4777
Email: info@echopi.com
Website: www.echopi.com